Installation manual EN

innova

HRA-i PLUS

50/15 R VY

Self-contained air conditioning unit with heat recovery

First of all, we would like to thank you for having chosen one of our units.

As you will realise, you have made a winning choice by purchasing a product that represents the state of the art in domestic air-conditioning technology.

Thanks to the product you have purchased and by following the suggestions in this manual, you will benefit from optimal environmental conditions with the lowest possible energy investment.

Compliance

This unit complies with European directives:

- Low Voltage Directive 2014/35/EU by transposition of the following technical standards: EN 60335-1:2012 + EN 60335-2-40:2003
- EMC Directive 2014/30/EU, by transposition of technical standards: EN 55014-1:2017 + EN 55014-2:2015 + EN 61000-3-2:2014 + EN 61000 3-3:2013
- RoHS Directive 2011/65/EU by transposition of the following technical standards: EN 50581:2012
- European ErP Ecodesign Regulation No. 1254/2014

Markings

CE

CONTENTS

GENERAL INFORMATION

1.1 About the manual

This manual was written to provide all the explanations for the correct management of the appliance.

⚠ This instruction manual is an integral part of the appliance and must therefore be kept in a safe place and must ALWAYS accompany the appliance even if it is passed on to another owner or user, or transferred to another plant. If it is damaged or lost, download a copy from the website.

⚠ Read this manual carefully before proceeding with any operation and follow the instructions in the individual chapters.

⚠ Specific warnings are given in each chapter of the document and should be read before starting operations.

⚠ The manufacturer accepts no liability for damage to persons or property resulting from failure to observe the regulations contained in this booklet.

⚠ This document is confidential under the terms of the law and may not be reproduced or passed on to third parties without the express authorisation of the company.

Editorial pictograms

The pictograms in the following chapter provide quick and unambiguous information necessary for the correct and safe use of the machine.

Related to safety

⚠ **High risk warning (bold text)**

- The operation described above presents a risk of serious physical injury, fatality, major damage to the appliance and/or to the environment if not carried out in compliance with safety regulations.

⚠ Low risk warning (plain text)

- The operation described above presents a risk of minor physical injury or minor damage to the appliance and/or to the environment if not carried out in compliance with safety regulations.

⊖ Prohibition (normal text)

- Marks actions that absolutely must not be done.

ⓘ **Important information (bold text)**

- This indicates important information that must be taken into account during the operations.

In the texts

Purpose of the actions

► Actions required

Expected responses following an action

- Lists

In the figures

1 The numbers indicate the individual components.
A Capital letters indicate a combination of components and dimensions.

❶ The white numbers in black marks indicate a series of actions to be carried out in sequence.

Ⓐ The black letter in white identifies an image when there are several images in the same figure.

Pictograms on the product

Symbols are used in some parts of the appliance:

Related to safety

Attention electrical hazard

- Warns relevant personnel of the presence of electricity and the risk of electric shock.

Related to the R32 refrigerant

Symbols are used in some parts of the appliance:

Caution low-flammability material

- The refrigerant gas R32 is slightly flammable and odorless. Avoid proximity to continuous ignition sources such as open flames, gas appliances, electric heaters, lit cigarettes, etc.

Instructions

- Read the instructions carefully before performing any operation on the appliance.

Instructions for Service

- The Technical Assistance Center must read the instructions before performing any operation on the appliance.

Instructions for the User

- Further information is available in the technical documentation of the appliance.

Recipients

User
Non-expert person capable of operating the product in safe conditions for people, for the product itself and the environment, interpreting an elementary diagnostic of faults and abnormal operating conditions, carrying out simple adjustment, checking and maintenance operations.
Installer
Expert person qualified to position and connect (hydraulically, electrically, etc.) the unit to the plant; this person is responsible for handling and correct installation according

to the instructions provided in this manual and the national standards currently in force.
To perform work on the refrigeration circuit, the installer must comply with the provisions of Regulation 303/2008/EC, which defines, in accordance with Directive 842/2006/EC, the requirements for companies and personnel regarding fixed refrigeration, air conditioning, and heat pump equipment containing certain fluorinated greenhouse gases (F-gas Certificate).
Service
Expert and qualified person authorised directly by the manufacturer to carry out all routine and supplementary maintenance operations, as well as every adjustment, check, repair and replacement of parts necessary during the life of the unit itself.
The service personnel must comply with the provisions of Regulation 303/2008/EC, which defines, in accordance with Directive 842/2006/EC, the requirements for companies and personnel regarding fixed refrigeration, air conditioning, and heat pump equipment containing certain fluorinated greenhouse gases (F-gas Certificate).

Organisation of the manual

The manual is divided into sections each dedicated to one or more target groups.
General information
It addresses all recipients.
It contains general information and important warnings that should be known before installing and using the appliance.
Product introduction
Addressed to all recipients, contains general information on the product.
Installation
It is addressed exclusively to the installer.
It contains specific warnings and all the necessary information for the positioning, installation, and connection of the appliance.
Commissioning, maintenance and troubleshooting
They are addressed exclusively to the Technical Assistance Centre.
It contains specific warnings useful information for the most common commissioning and routine maintenance.
Technical information
It addresses all recipients.
It contains detailed technical information about the appliance.

1.2 General Warnings

⚠ Specific warnings are given in each chapter of the document and should be read before starting operations.

⚠ All personnel involved must be aware of the operations and dangers that may arise when beginning all unit installation operations.

⚠ Installation performed outside the warnings provided in this manual and use of the appliance outside the prescribed temperature limits will invalidate the warranty.

⚠ The installation and maintenance of air conditioning equipment can be dangerous as they contain pressurized refrigerant gas and live electrical components. The installation, initial startup, and subsequent maintenance stages must be carried out exclusively by authorized and qualified personnel (see first startup request form attached to the equipment).

⚠ Any contractual or extra-contractual liability for damage caused to persons, animals or property, due to installation, adjustment and maintenance errors or improper use is excluded. All uses not expressly indicated in this manual are not permitted.

⚠ The installation of the appliances must be carried out by a qualified company which, on completion of the work, will issue a declaration of compliance to the person in charge of the plant in accordance with the regulations in force and the instructions provided in the instruction booklet accompanying the appliance.

⚠ First start-up and repair or maintenance operations must be carried out by the Technical Assistance Centre or by qualified personnel following the provisions of this manual.

⚠ Do not modify or tamper with the appliance as this can lead to dangerous situations.

⚠ Use suitable accident-prevention clothing and equipment during installation and/or maintenance operations. The manufacturer is not liable for the non-observance of the current safety and accident prevention regulations.

⚠ In case of liquid or oil leaks, switch off the main power switch of the system and close the water valves. Promptly contact the authorized Technical Assistance Center or professionally qualified personnel, and refrain from personally intervening on the equipment.

⚠ When replacing components, use only original spare parts.

⚠ The manufacturer reserves the right to make changes to its models at any time to improve its product, without prejudice to the essential characteristics described in this manual. The manufacturer is not obliged to add such modifications to machines previously manufactured, already delivered or under construction.

Specific warnings for R32

The document only contains some of the warnings regarding R32 refrigerant. For more comprehensive information, please read the safety data sheet available from the retailers.

⚠ In each chapter, specific warnings are included for the operations described within. These warnings should be read before starting any activities.

⚠ All precautions regarding the handling of refrigerant must be followed in accordance with current regulations.

⚠ The unit uses environmentally-friendly R32 refrigerant, with a Global Warming Potential (GWP) of 675. Do not release R32 gas into the atmosphere.

⚠ The R32 refrigerant gas is slightly flammable and odorless.

⚠ Do not place flammable objects (spray cans) within 1 meter of the air discharge.

⚠ Avoid proximity to continuously operating ignition sources (open flames, gas appliances, electric stoves, lit cigarettes, etc.).

1.3 Basic safety rules

We would like to remind you that the use of products that use electricity and water involves observing certain basic safety precautions such as:

⚠ This appliance can be used by children aged 8 years and older and by persons with reduced physical, sensory, or mental capabilities, or lack of experience or knowledge, if they are supervised or have received instructions on the safe use of the appliance and understand the associated dangers. Children should not play with the appliance.

⚠ The cleaning and maintenance tasks intended to be carried out by the user should not be performed by children without supervision.

⚠ It is necessary to take precautions to prevent the room from having a backflow of gases from the flue or from other fuel-burning appliances.

⛔ It is forbidden for children and unassisted disabled persons to use the appliance.

⛔ It is forbidden to touch the appliance with wet or damp body parts.

⛔ It is forbidden to carry out any operation before disconnecting the appliance from the power supply by setting the plant master switch to "off".

⛔ It is forbidden to modify the safety or adjustment devices without the authorisation and instructions of the appliance manufacturer.

⛔ It is forbidden to pull, unplug or twist the electrical cables coming out of the appliance, even if it is disconnected from the mains supply.

⛔ It is forbidden to introduce objects and substances through the openings provided for the intake and delivery of air.

⛔ It is forbidden to open the access doors to the internal parts of the appliance without first setting the plant master switch to “off”.

⛔ It is forbidden to dispose of packaging material and leave it within reach of children as it can be a potential source of danger.

Specific safety rules for R32

The document only contains some of the safety rules regarding R32 refrigerant. For more comprehensive information, please read the safety data sheet available from the retailers.

⛔ Smoking is prohibited near the appliance.

⛔ The use of mobile phones is prohibited near the appliance.

⛔ The use of leak detectors with halogen lamps is prohibited.

1.4 Disposal

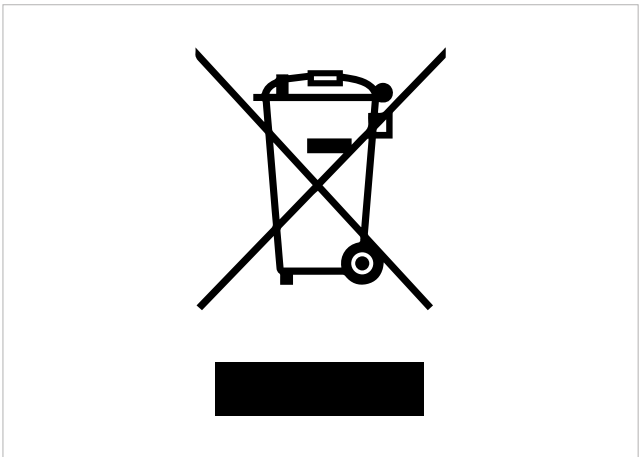

The symbol on the product or its packaging indicates that the product must not be treated as normal household waste, but must be taken to the appropriate collection point for the recycling of electrical and electronic equipment.

Proper disposal of this product avoids harm to humans and the environment and promotes the reuse of valuable raw materials.
For more detailed information about the recycling of this product, contact your local city office, your household waste disposal service or the shop where you purchased the product.
Illegal disposal of the product by the user involves the application of the administrative sanctions provided for by the regulations in force.
This provision is only valid in the EU Member States.

⚠ Avoid disassembling the appliance yourself.

⚠ This unit contains fluorinated greenhouse gases covered by the Kyoto Protocol. Maintenance and disposal operations must be carried out only by qualified personnel.

⚠ **Contact an authorised Technical Assistance Centre to disassemble the appliance.**

PRODUCT INTRODUCTION

2.1 Identification

The appliance can be identified by the rating plate:

1. Technical rating plate

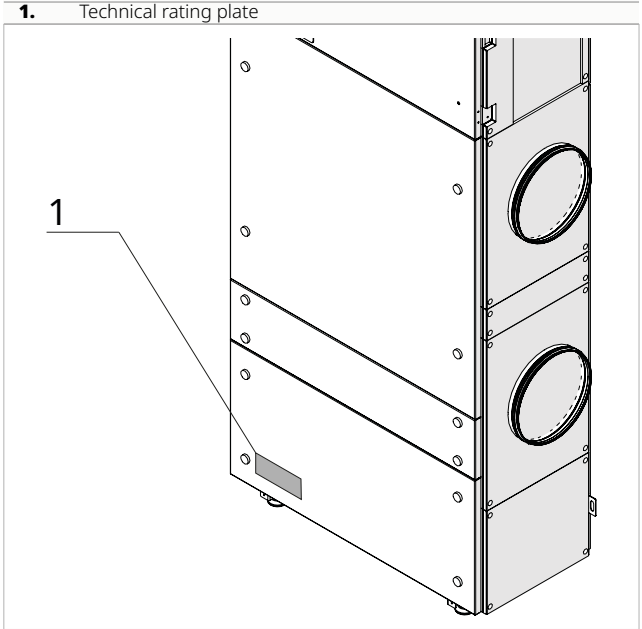

Technical rating plate
This shows the technical and performance specifications of the appliance.

⚠ According to EU Regulation No. 517/2014 concerning certain fluorinated greenhouse gases, it is mandatory to indicate the total quantity of refrigerant present in the installed system. This information is available on the technical plate of the unit.

⚠ Tampering with, removing or missing identification plates does not allow the product to be reliably identified by its serial number and therefore invalidates the warranty.

2.2 Destination of use

HRA-i PLUS is an active recovery unit for heating, cooling, and air renewal in the environment.
The unit consists of a single block comprising all components for proper operation:

- fans with constant airflow function
- refrigeration circuit with horizontal BLDC compressor
- air filtration sections ePM1 80%
- high-efficiency heat recovery unit

HRA-i PLUS can function as a passive heat recovery system and as an air conditioner.
It is particularly suitable for residential premises and is supplied as a plug-and-play unit for quick and simplified installation.

2.3 Description of the appliance

Structure: self-supporting frame in sheet metal, externally coated galvanized sheet panels, with interposed insulation in polystyrene. Internal closures in thick galvanized sheet metal.

Heat exchanger: Counterflow type, high-efficiency cross-flow polypropylene heat exchanger.

Brushless fans: DC fans regulated by inverters allow high levels of comfort and energy efficiency with constant flow function.

Filters: EPM1 filter on supply air and exhaust air with low pressure drop. Easily removable for routine maintenance.

Refrigeration circuit: copper brazed with high-efficiency BLDC compressor, drier filter, finned coils, electronic expansion valve, and safety devices.

2.4 List of external components

1.	Supply air (configurable)
2.	Air recirculation
3.	Extracted air (configurable)
4.	Outdoor air intake (configurable)
5.	Outdoor air exhaust (configurable)

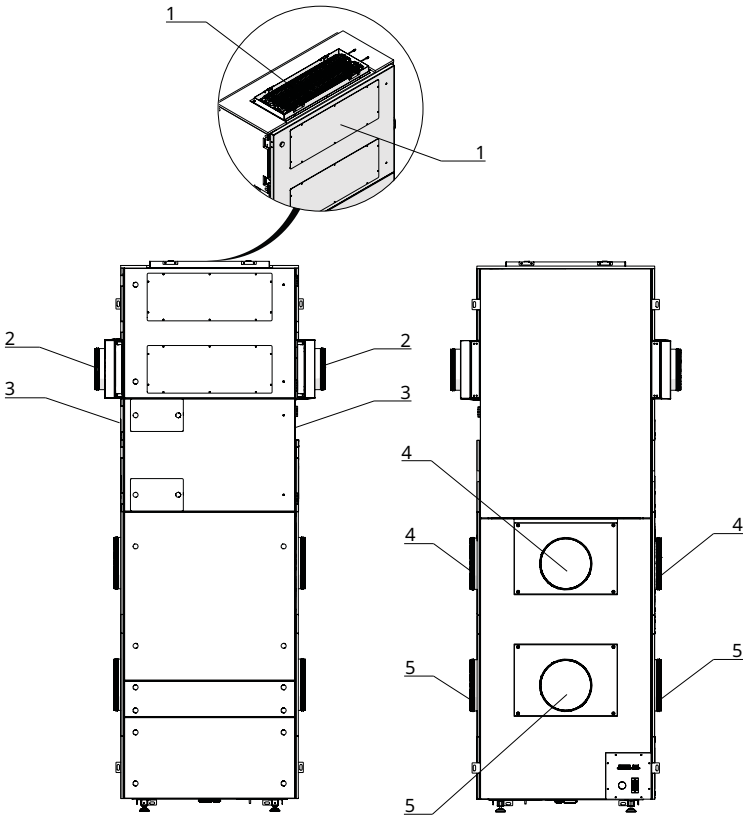

1.	Condensate drain connection (optional)
2.	Plate for electrical connections
3.	Installation bracket
4.	Air recirculation

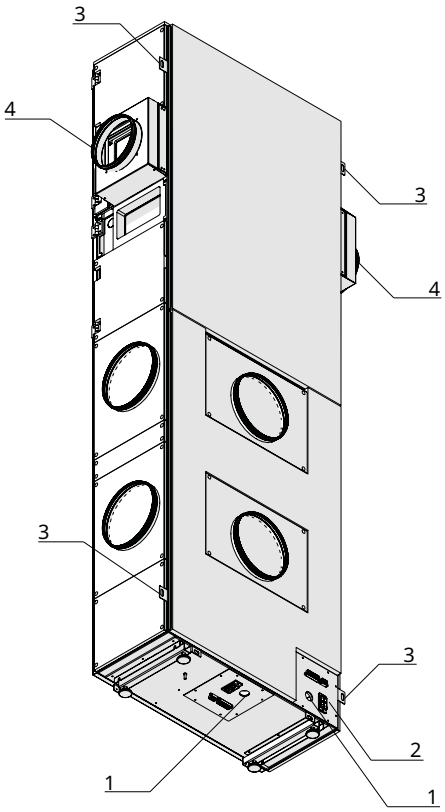

2.5 List of internal components

1.	Indoor side battery
2.	Air recirculation
3.	VMC Extracted filter
4.	Heat exchanger
5.	VMC Outdoor air filter
6.	General expulsion fan
7.	Outdoor side battery
8.	Liquid sensor
9.	Display
10.	Electrical panel
11.	Compressor
12.	General expulsion filter
13.	VMC Supply fan
14.	VMC Outdoor air fan
15.	Supply fan

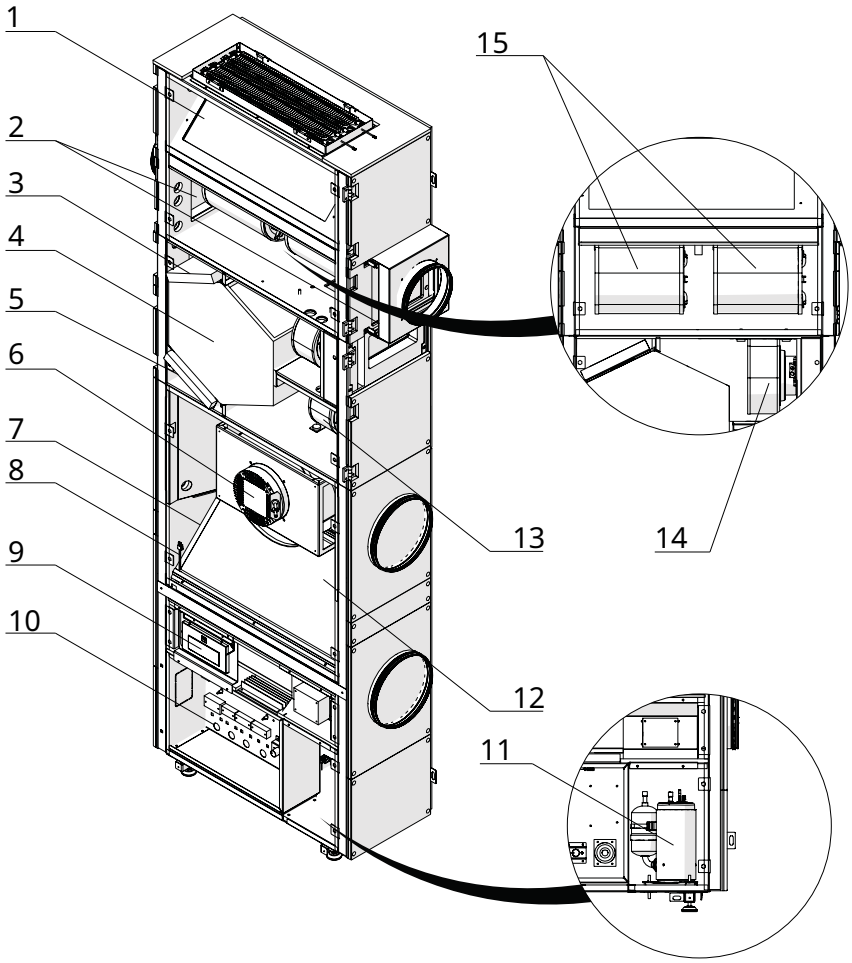

1.	Pipe routing
2.	Electrical connection passage

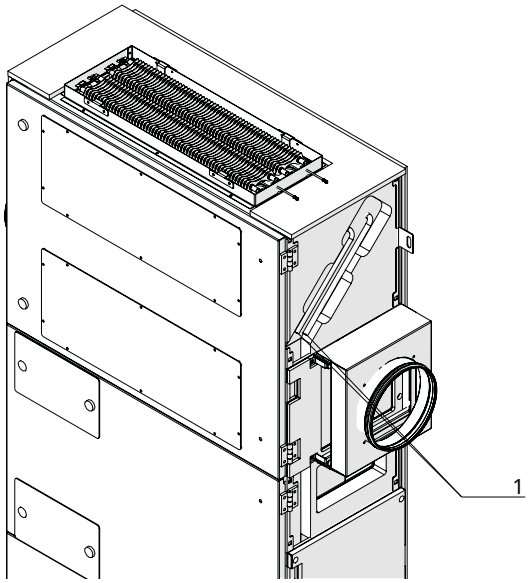

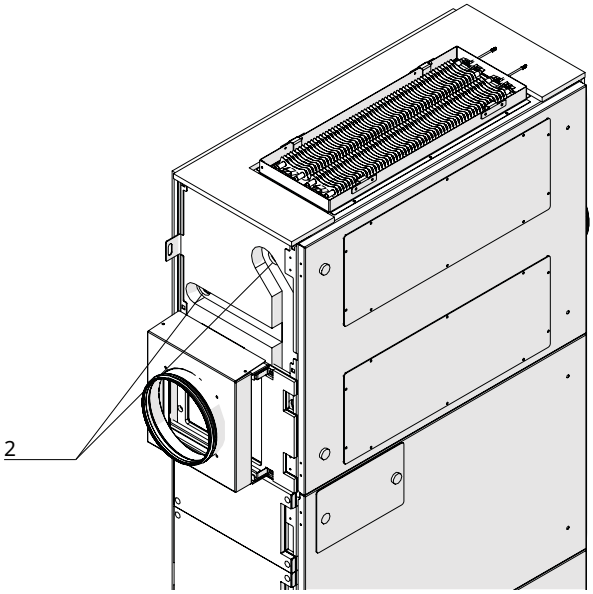

2.6 Compatible accessories

Description		Code
Commands for Y versions		
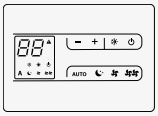	CNT-B Smart touch electronic wall control panel with T/H sensor for Y electronics, integrated Wi-Fi module, black color.	AHRA0571
	CNT-W Smart touch electronic wall control panel with T/H sensor for Y electronics, integrated Wi-Fi module, white color.	AHRA0572
	CNT-B Smart touch electronic wall control panel with T/H sensor for Y electronics, integrated Modbus communication module, black color.	AHRA0581
	CNT-W Smart touch electronic wall control panel with T/H sensor for Y electronics, integrated Modbus communication module, white color.	AHRA0582

INSTALLATION

3.1 Preliminary Warnings

⚠ **For detailed information on the products, refer to chapter 9** *p. 51***.**

⚠ The installation must be carried out by the installer. There is a risk of water leakage, electric shock or fire if the installation is not performed correctly.

⚠ During installation, it is necessary to observe the precautions mentioned in this manual, and on the labels affixed to the inside of the appliances, as well as to take every precaution suggested by common sense and the safety regulations in force at the place of installation.

⚠ Using only the supplied installation-specific components is recommended. Use of different components could lead to water leakage, electric shock or fire.

⚠ Failure to apply the indicated rules may cause malfunctions of the appliances and relieves the manufacturer from any warranty and from any damage caused to persons, animals or property.

Preliminary warnings for R32

⚠ Before working on systems containing flammable refrigerants, it is necessary to perform safety checks to ensure that the risk of combustion is minimized.

⚠ The appliance must be protected from accidental impacts to prevent mechanical damage.

⚠ Do not pierce or burn.

3.2 Reception

Preliminary Warnings

⚠ Upon receipt of the package check that it is not damaged, otherwise accept the goods with reserve, producing photographic evidence of any damage.

⚠ In the event of damage, notify the shipper by registered mail with return receipt within 3 days of receipt. Presenting photographic documentation, similar information should also be sent by fax to the manufacturer.

⚠ No reports of damage will be taken into account later than 3 days after delivery.

⚠ The packaging should be transported in a vertical position without tilting. If it is tilted, please notify the carrier immediately.

Package description

The packaging is made of suitable material and carried out by experienced personnel.
The units are all checked and tested and are delivered complete and in perfect condition.
The appliance is shipped in standard packaging consisting of a cardboard box and a set of polystyrene foam protectors, placed on a wooden pallet and secured with straps.
The packaging consists of a fumigated crate, a cardboard casing, and a set of expanded polystyrene protections.
The units are shipped in batches of three.

3.3 Dimensions and weights with packaging

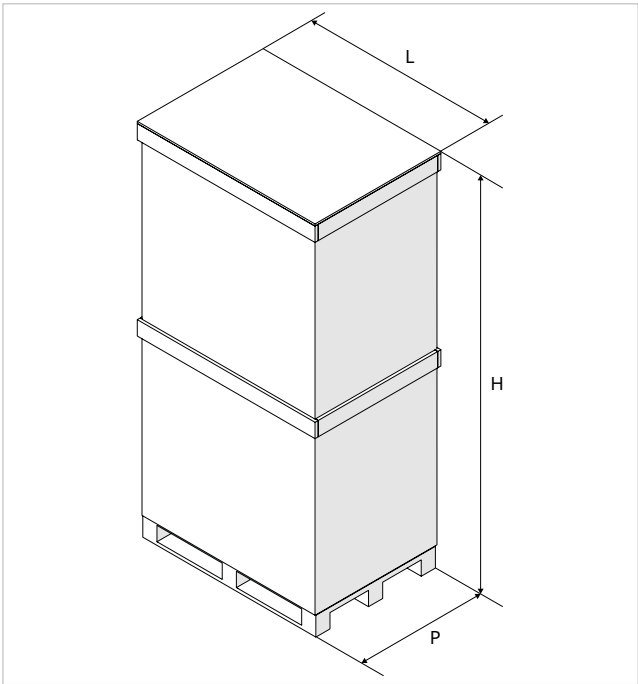

Models	u.m.	50/15-V
Packaging dimensions		
Length	mm	1130
Depth	mm	800
Height	mm	2280
Weight	kg	300,0

3.4 Handling with packaging

Preliminary Warnings

⚠ The product should only be handled by qualified personnel, adequately equipped, and using tools suitable for the weight and dimensions of the product.

⚠ Before each handling operation, check the lifting capacity of the machinery used in accordance with the indications on the packaging.

⚠ The packaging must be transported in a vertical position without being tilted.

⚠ When the load is lifted from the ground, stay clear of the immediate and surrounding area.

⚠ Check the information on the packaging for the amount of stackable packages.

⚠ In manual operations, the maximum weight per person required by current legislation must always be observed.

Handling

⚠ Use a forklift

⚠ The unit can only be moved manually for short trips in exceptional cases. In this case it is necessary to carefully check that the weight of the unit does not exceed what is stipulated by the regulations with respect to the number of people employed.

Storage

Preliminary Warnings

⚠ Stored in accordance with the applicable national regulations.

⚠ Store in a closed environment protected from the weather, off the ground by means of sleepers or pallets with temperatures not below 0 °C, up to a maximum of 40 °C.

⚠ Do not overturn the packaging.

⚠ Place the appliance only in a vertical position.

Unpacking

Preliminary Warnings

⚠ Check that the individual components are present.

⚠ Check that no components were damaged during transport.

⚠ Dispose of the packaging components following the applicable waste disposal regulations. Check for disposal arrangements with your municipality.

⚠ Handle with care.

⚠ The appliance must always be moved in a vertical position.

⛔ The packing material (cardboard, staples, plastic bags, etc.) must not be dispersed or abandoned in the surrounding environment and must be kept out of children reach, as it can be dangerous.

Removing the packaging

To remove the packaging

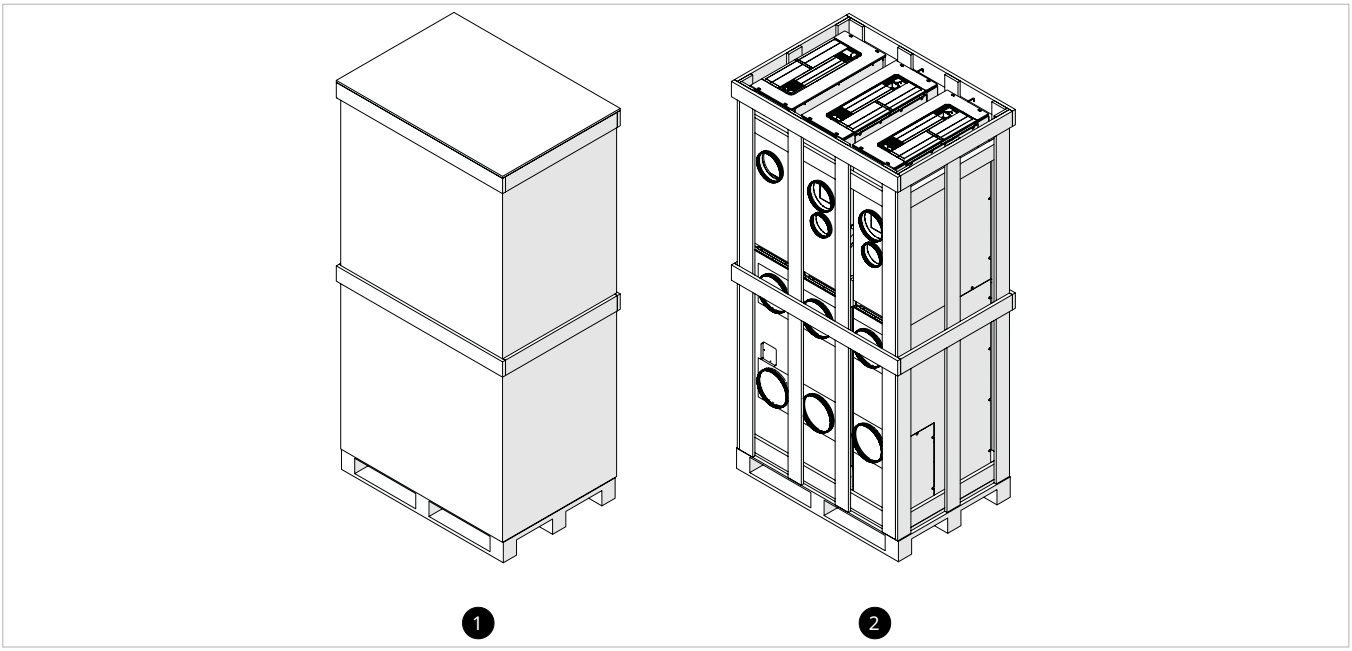

► remove the cardboard casing

► remove the accompanying components

► remove the polystyrene elements

► remove the cage cover

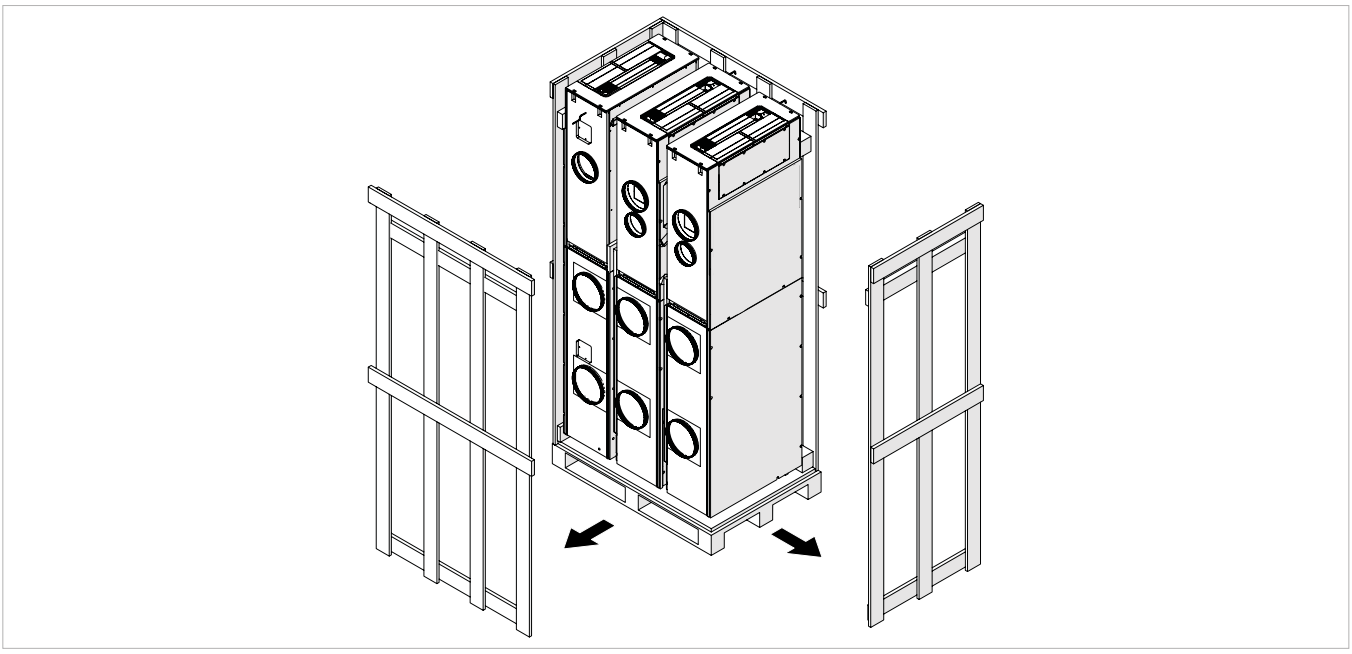

► remove the crosspieces and slats from one of the long sides of the crate

► remove the crosspieces and slats from one of the long sides of the crate

1. Buttonhole

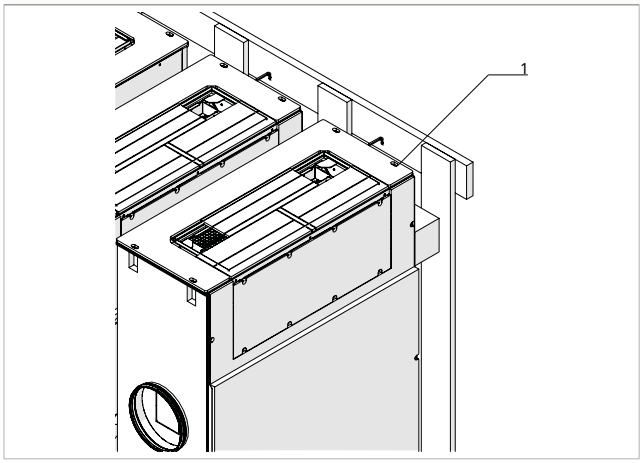

► remove the appliance from the box

⚠ It's recommended to lift the units from above using the slots on the top panel. Use equipment suitable for the weight and dimensions of the product.

⚠ It's possible to slide the units sideways or frontally with extreme caution. Pay close attention to avoid damaging the unit, the surrounding environment, or oneself.

Accompanying material

They are included with the appliance, inside the packaging:

- Installation manual
- Adjustable spacers (4 pcs)

⚠ Check the presence of the individual components.

3.6 Handling without packaging

Preliminary Warnings

⚠ The appliance must be handled only by qualified personnel, adequately equipped and with equipment suitable for the weight and dimensions of the appliance.

⚠ The unit must be handled using non-slip gloves.

⚠ Before each handling operation, check the lifting capacity of the machinery used in accordance with the indications on the packaging.

⚠ When the load is lifted from the ground, stay clear of the immediate and surrounding area.

⚠ Check the information on the packaging for the amount of stackable packages.

⚠ In manual operations, the maximum weight per person required by current legislation must always be observed.

Movement methods

► use a fork lift, scaffolding or other suitable lifting system

⚠ The unit can only be moved manually for short trips in exceptional cases. In this case it is necessary to carefully check that the weight of the unit does not exceed what is stipulated by the regulations with respect to the number of people employed.

3.7 Installation site

The location of the appliance must be determined by the plant engineer or a competent person and must take into account both purely technical requirements and any national/local legislation in force.
The unit is intended to be installed indoors in a vertical position on a wall. The installation location should be chosen adjacent to a wall that communicates with the outside.

Preliminary Warnings

⚠ Avoid installing the unit in the vicinity of:

- obstacles or barriers that cause recirculation of the exhaust air
- narrow places where the sound level of the appliance can be enhanced by reverberations or resonances
- environments with the presence of flammable or explosive gases
- very damp environments (laundries, greenhouses, bathrooms with high humidity, etc.) to prevent the formation of condensation on the external panels of the unit
- environments with the presence of flammable or explosive gases or flammable fluids
- solar radiation and proximity to heat sources

⚠ **Avoid installing the unit in the vicinity of the sea. Salty atmospheres cause corrosion and oxidation of the internal components, compromising the functioning of the unit.**

⚠ Avoid placing the unit within 1 metre of radio and video equipment.

⚠ Do not install above heat sources.

⚠ Ensure that:

- the installation site of the unit must be chosen with the utmost care to guarantee adequate protection from shocks and consequent damage
- the supporting surface is capable of supporting the weight of the appliance
- the supporting surface does not affect load-bearing building elements, piping or power lines
- the functionality of load-bearing elements is not compromised
- there are no obstacles to the free circulation of air through the holes (plants, leaves...)
- the appliance must be installed in a position where it can be easily serviced
- the safety distances between the units and other appliances or structures are scrupulously respected so that the air entering and leaving the fans is free to circulate

⚠ If the unit is installed incompletely or on an unsuitable surface, it could cause damage to persons or property if it becomes detached.

⚠ The appliance must not be in a position where the air flow is aimed directly at a person.

⚠ Provide the following:

- a drain nearby for the outflow of condensation
- a compliant power supply nearby

Preliminary warnings for R32

⚠ The appliance must be installed in well-ventilated environments that have a minimum floor area as indicated in the table "Minimum Floor Area" based on the total refrigerant charge of the circuit.

⚠ **The refrigerant charge refers to the total amount of refrigerant in the circuit, which includes the factory charge and any additional charge.**

⚠ Please refer to the technical rating plate on the associated outdoor unit for the quantity of refrigerant loaded into the unit.

⚠ If the appliance is placed in a poorly ventilated area, precautions must be taken to prevent the accumulation of leaked refrigerant, thus avoiding the risk of fire or explosion.

⚠ The appliance should be placed in a room where there are no continuously operating open flames (such as a gas appliance in operation) or ignition sources (such as an operating electric heater).

⚠ Any ventilation openings must be kept clear of obstacles.

⚠ Perform the following checks:

- Perform safety checks to ensure that the risk of combustion is minimized
- avoid working in confined spaces
- delimit the area around the workspace
- ensure safe working conditions around the area by checking for flammable materials

3.8 Minimum installation distances

The clearance zones for the installation and maintenance of the appliance are shown in the figure. Established spaces are necessary to avoid barriers to airflow and allow for normal cleaning and maintenance.

⚠ Make sure that there is sufficient space to allow the panels to be removed for routine and supplementary maintenance operations.

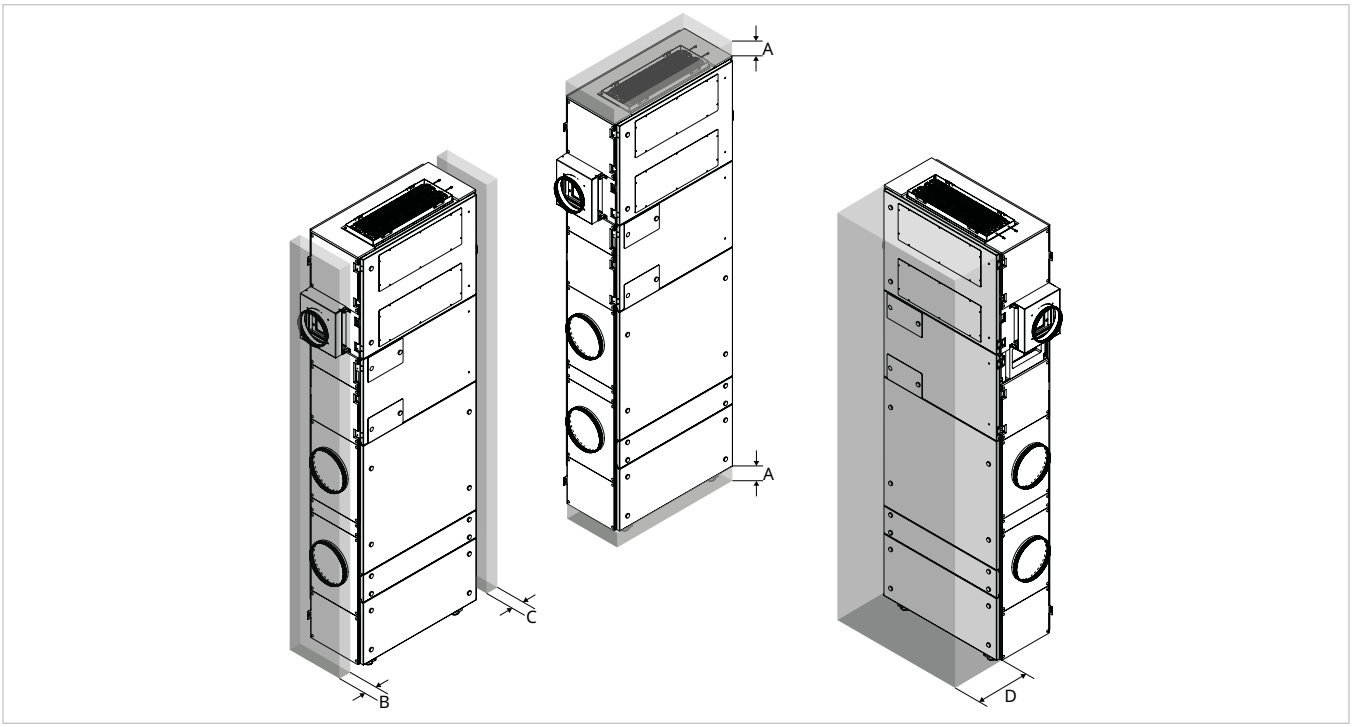

Models	u.m.	50/15-V
Minimum distances		
A	mm	50
B	mm	50
C	mm	50
D	mm	300

3.9 Positioning

Preliminary Warnings

The unit must be installed on the wall.

⚠ Check that:

- the surface supports the weight of the appliance
- the surface does not affect piping or power lines
- the functionality of load-bearing elements is not compromised

Drilling the outside wall

The external wall must be prepared with holes for air ducting.

To drill the holes:

► mark the position of the hole

► use a drill

► drill a guide hole

► use a core drill

► make a hole through the wall

► maintain a downward slope towards the outside

⚠ To avoid the release of large amounts of dust and debris into the room, you are advised to couple the core drill with a vacuum system.

⚠ Proceed with caution near the outside wall to avoid breaking the plaster around the hole.

⚠ Take precautions so that the removed material does not hit people and objects below.

Positioning the unit

To position the unit:

1. Installation bracket

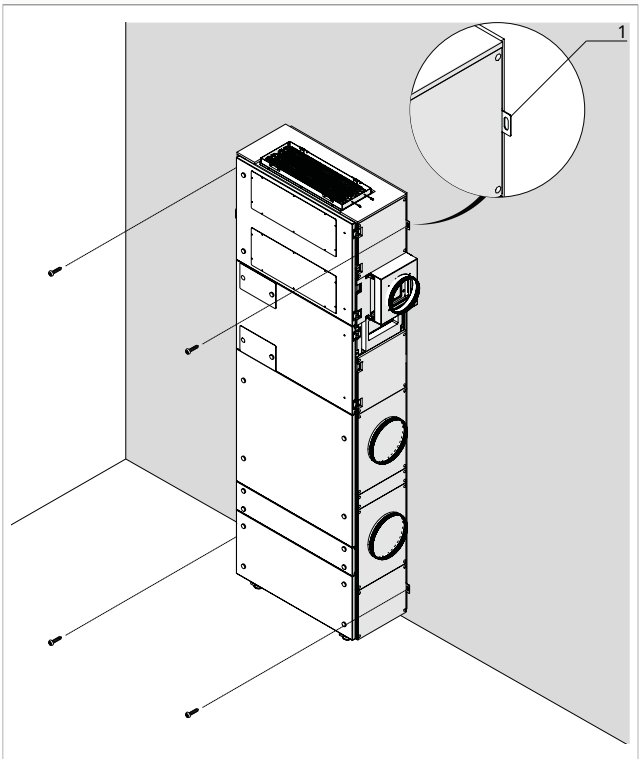

⚠ Check the correct orientation of the unit.

► mark the position of the fixing holes

► use screws and expansion plugs suitable for the weight of the appliance and the material of the supporting wall

► secure the unit to the wall using the brackets

Check that:

- it is levelled
- the minimum installation distances are respected

3.10 Condensate drain connection

Preliminary Warnings

⚠ This appliance is equipped with trays for collecting the condensate that is produced during operation. Condensate must be routed to a suitable place for drainage.

⚠ If the drainage line runs into a container (tank or other) it must be ensured that the container itself is hermetically sealed and most importantly it must be ensured that the drainage pipe is not immersed in water.

⚠ The hole for the condensate pipe must always have an outwards slope.

⚠ When connecting the condensate drain, take care not to crush the rubber pipe.

1. Condensate drain connection

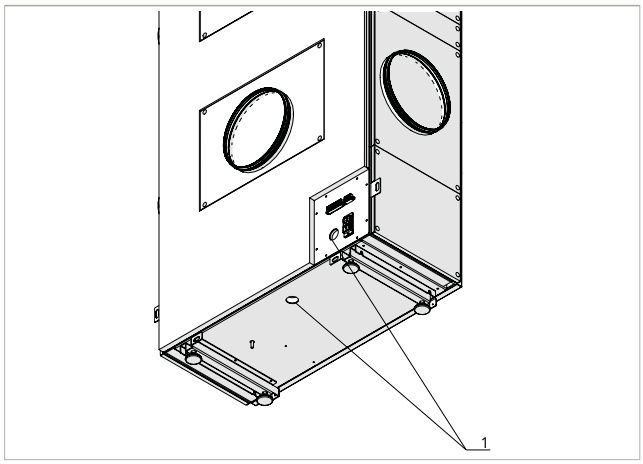

Attachment position

The size and position of the condensate drain attachments are shown below.

Connections

1.	Condensate drain connection
2.	Condensate drain pipe
3.	Hose clamp

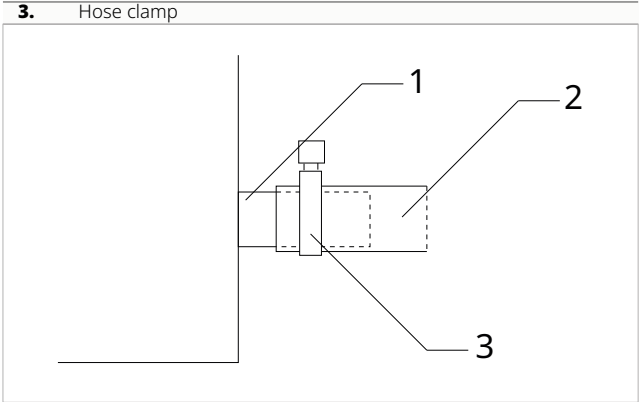

1.	Drainage trap

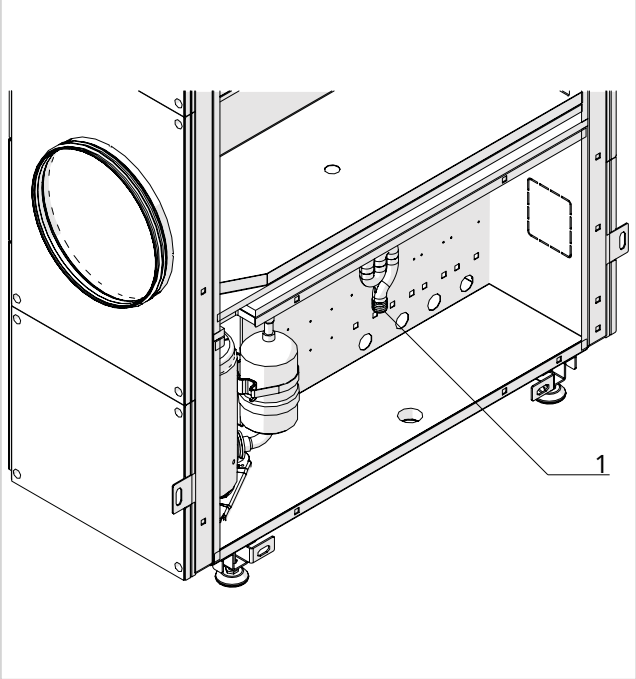

To connect the drain:

- ► connect the drainage pipe to the connection provided on the unit
- ► connect the drainage pipe to the hydraulic network
- ► direct the condensate drain pipe to a suitable place for draining
- ► maintain a minimum slope of 3% towards the drain location
- ► insulate junction points

⚠ Use plastic drainage pipes.

⚠ Avoid metal pipes.

⚠ Make sure all joints are sealed to prevent leakage of water.

⚠ Condensate drain pipes must be insulated for both indoor and outdoor sections to avoid condensation on the surface and/or frosting problems. The insulation must be inserted all the way to the condensate drain pipe connection on the unit.

3.11 Aeraulic connections

Preliminary Warnings

⚠ The sizing of ducting and supply and extract grids must be carried out by a professionally qualified person.

⚠ To prevent the transmission of any vibrations of the machine into the room, an anti-vibration joint should be placed between the fan outlets and the ducts.

⚠ The connecting pipes must be of a suitable diameter and supported so that their weight does not put a strain on the appliance.

Connections

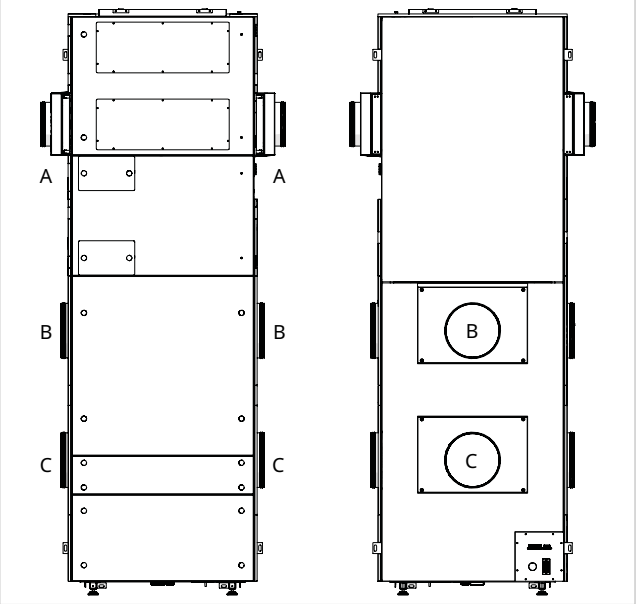

1. Extracted air

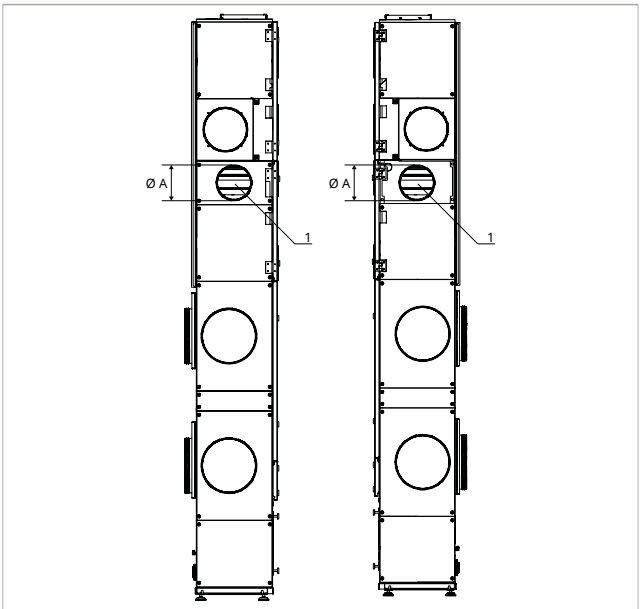

Models	u.m.	**50/15-V**
Product dimensions		
Air connection A	mm	125

1. Outdoor air intake (PDC) and ventilation air inlet (VMC)
2. Outdoor air exhaust (PDC) and stale air exhaust (VMC)

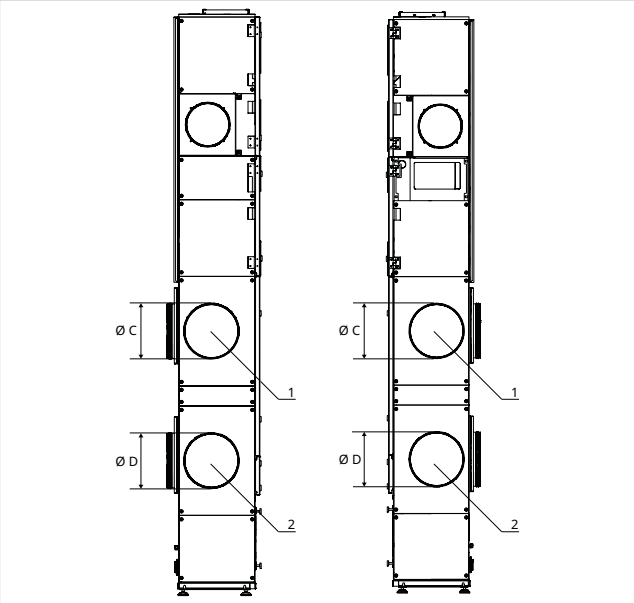

1. Outdoor air intake (PDC) and ventilation air inlet (VMC)
2. Outdoor air exhaust (PDC) and stale air exhaust (VMC)

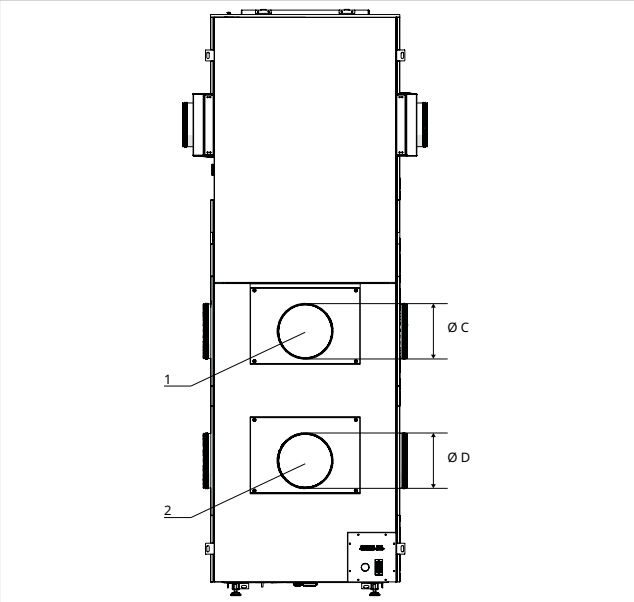

Models	u.m.	**50/15-V**
Product dimensions		
Air connection C	mm	200
Air connection D	mm	200

Circular connections

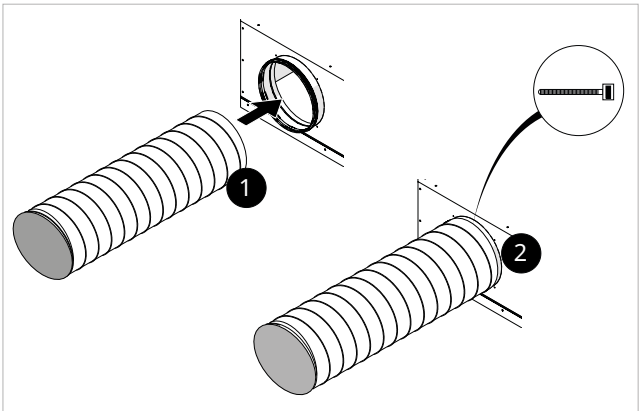

- ► position the ducts on the connections provided on the appliance
- ► use a metal clamp or duct fixing collar
- ► fix the ducts on the attachments

⚠ Use ducts lined with anti-condensation material of a suitable thickness.

Airflow configurations

Internal air flows

The unit is supplied with the air outlet towards the environment from the top.

It is possible to change the configuration of the air outlet towards the environment to the front position.

1. Air supply - Configuration A (standard)

2. Air supply - Configuration B

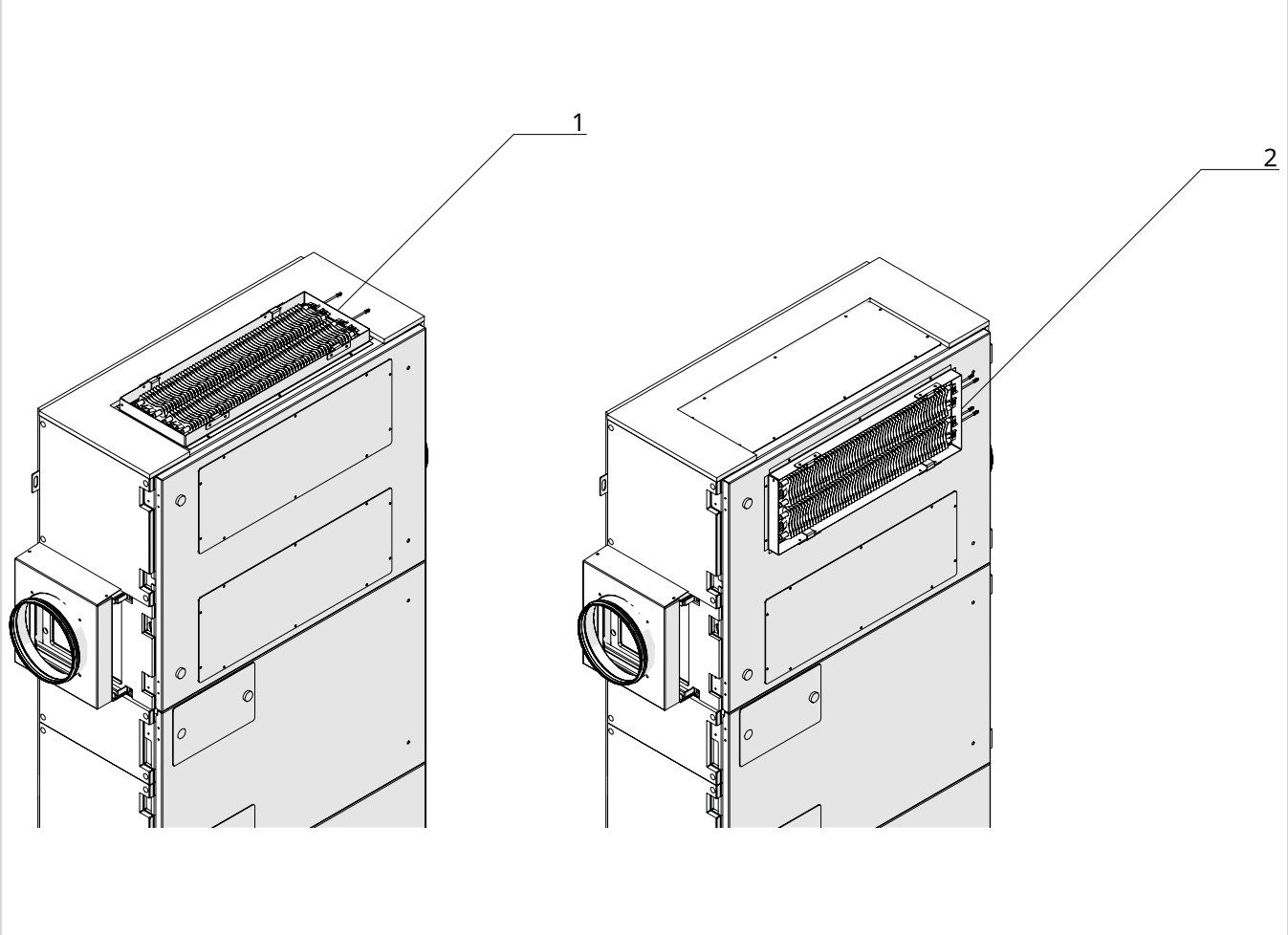

External air flows

The unit is supplied with the intake and exhaust air ducts plugged.
It is necessary to select an intake for external air and an outlet for external air from the three possible configurations.

- Configuration A: left side
- Configuration B: rear side
- Configuration C: right side

1.	External air intake - Configuration A
2.	External air intake - Configuration B
3.	External air intake - Configuration C

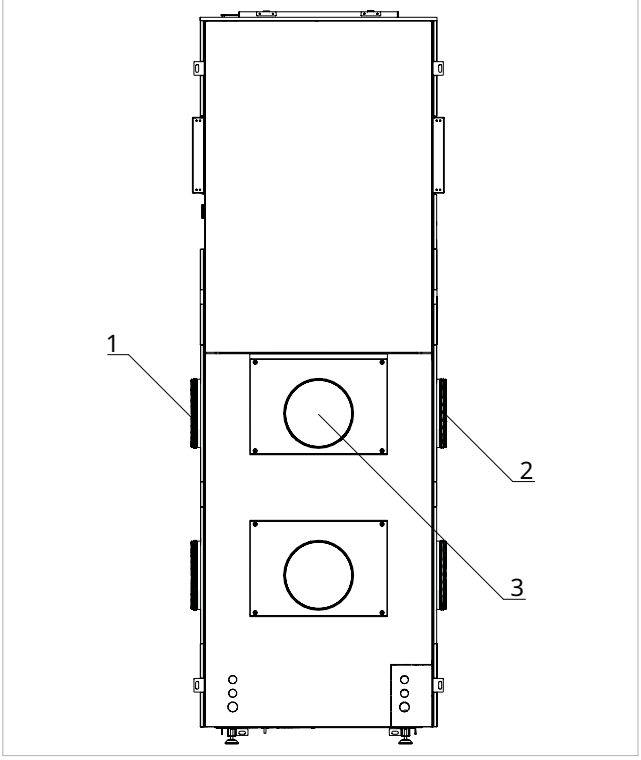

1.	Outdoor air exhaust - Configuration A
2.	Outdoor air exhaust - Configuration B
3.	Outdoor air exhaust - Configuration C

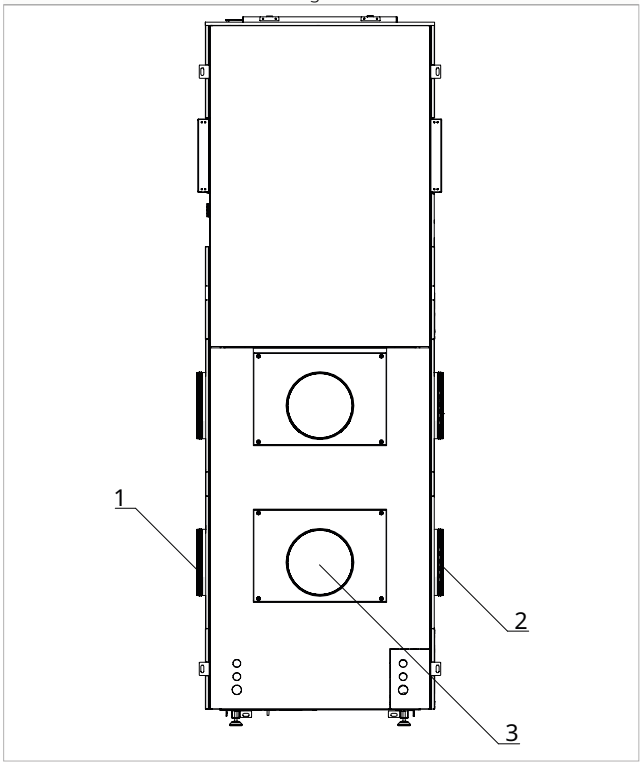

Changing the internal air flows configuration

To modify the air supply configuration:

1.	Electrical heater	**2.**	Front air outlet stopper

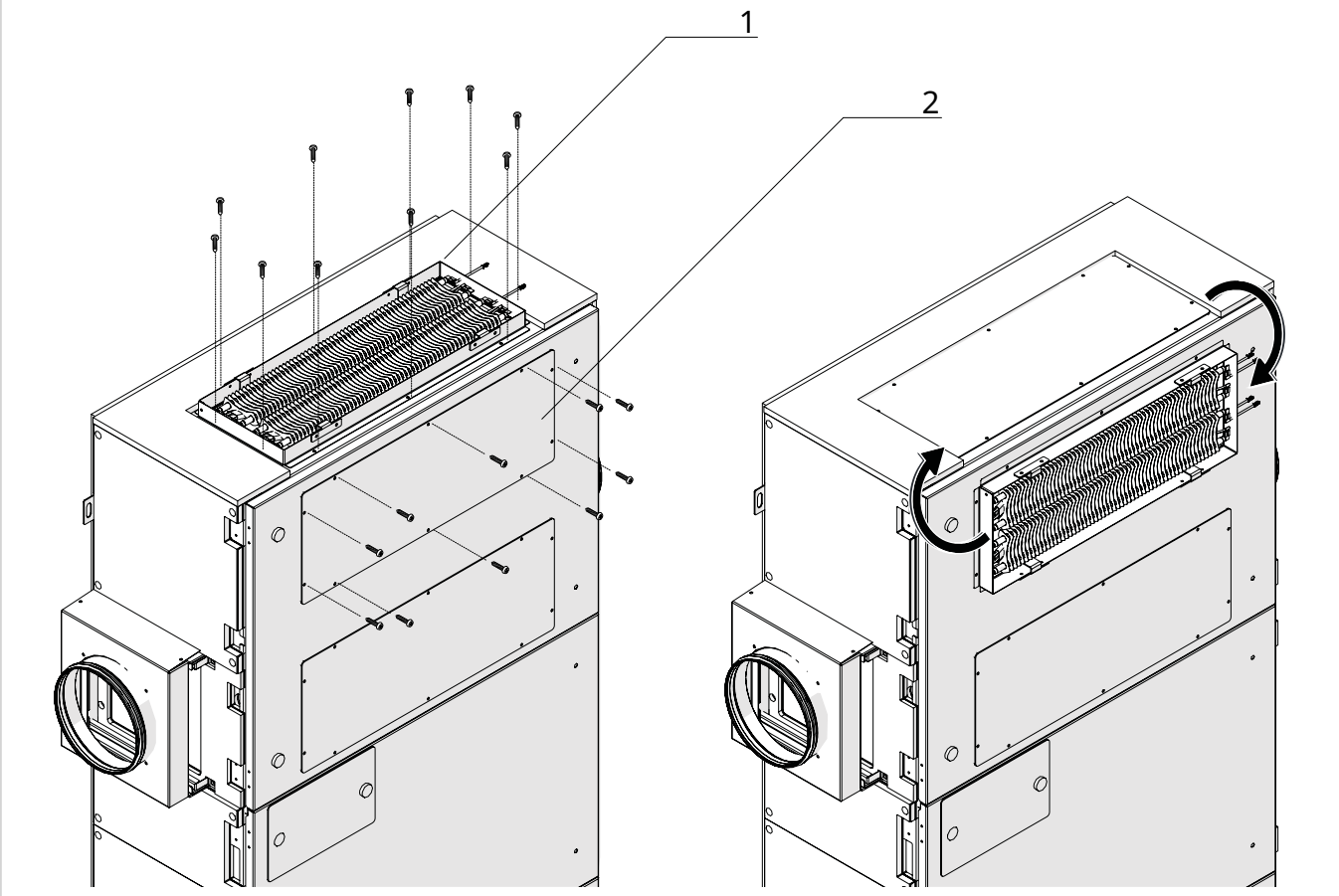

- ► remove the fixing screws of the electric heater and the fixing flange of the duct
- ► open the upper front panel
- ► remove the insulation

- ► remove the front air outlet stopper
- ► place the stopper on the upper outlet
- ► install the resistors with the supply flange in the front position

External air flows configuration

Depending on the chosen configuration:

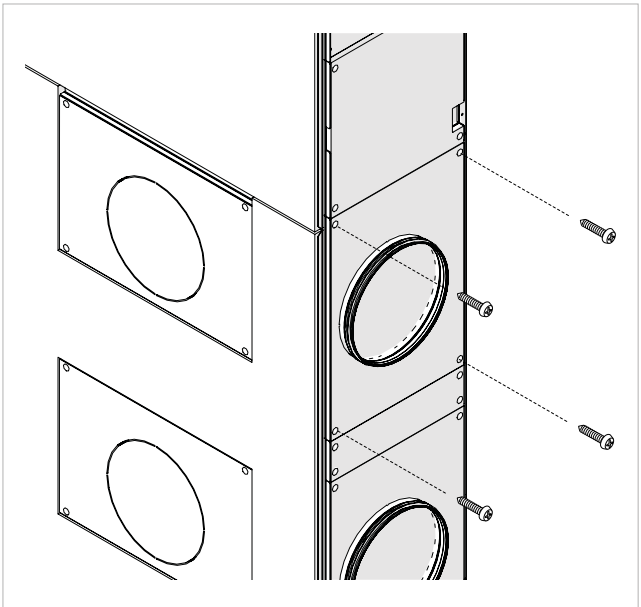

- ► remove the existing intake and exhaust plates
- ► install the intake and exhaust plates on the desired side or at the back

3.12 Electrical connections

The appliance leaves the factory fully wired and only requires connection to the power supply, control and any accessories.

Preliminary Warnings

⚠ All operations of an electrical nature must be carried out by qualified personnel having the necessary legal requirements, trained and informed about the risks related to such operations.

⚠ All connections must be made in accordance with the relevant regulations in force in the country of installation.

⚠ Before carrying out any work, make sure that the power supply is switched off.

⚠ The unit should only be powered after the plumbing and electrical work has been completed.

⚠ References:

- for electrical connections please refer to the wiring diagrams in this manual, especially for the part concerning the power terminal board
- for the supply voltage, please refer to the nameplate on the appliance

⚠ Check that:

- the mains characteristics are adequate for the power consumption of the appliance, also taking into account any other machinery in parallel operation
- the power supply voltage and frequency correspond to those specified on the nameplate on the appliance
- the cables are suitable for the type of laying in accordance with the IEC standards in force
- the cable terminals are provided with ferrule terminals, of a cross-section proportionate to the connecting cables, before inserting them into the terminal board
- the power supply is adequately protected against overloads and/or short circuits

⚠ It is mandatory:

- to connect the appliance to an effective grounding system
- for units with three-phase power supply, check the correct phase connection
- install a dedicated disconnector equipped with delayed fuses or an all-pole magnetothermic circuit breaker complying with IEC-EN standards, suitable for the absorption of the appliance, with differential relay with a maximum setting equal to that specified by the individual electrical regulations

⚠ Ensure that a connection to earth is made. Do not ground the appliance to distribution pipes, surge arresters or the ground of the telephone system. If not performed correctly, grounding can cause an electric shock. Momentary high voltage surges caused by lightning or other causes could damage the ventilation unit.

⚠ A ground dispersion breaker is recommended. Failure to install this device could result in an electric shock.

⚠ Electrical connections must be carried out in accordance with the instructions in the manual and the standards or practices governing the connection of electrical appliances at national level. Insufficient capacity or incomplete electrical connections could lead to electric shock or fire.

⚠ The power supply line must be adequately dimensioned to avoid voltage drops or overheating of cables or other devices placed on the line.

⚠ Use a dedicated power supply circuit. Never use a power supply to which another appliance is also connected due to risk of overheating, electric shock or fire.

⚠ For the electrical connection, use a cable of sufficient length to cover the entire distance without any connection. Do not use extension cables. Do not apply other loads on the power supply.

⚠ After connecting the interconnection and power supply cables, ensure that the cables are arranged so that they do not exert excessive forces on the covers or electrical panels. Install the covers on the cables. Incomplete connections of the covers can lead to overheating of the terminals, electric shock or fire.

⚠ Any replacement of the power cable must only be carried out by qualified personnel and in accordance with current national regulations.

⚠ The manufacturer is not liable for any damage caused by the lack of earthing or failure to comply with the specifications in the respective diagrams.

⚠ The appliance is equipped with a noise filter as required by current regulations. Use selective residual current circuit breakers to compensate for the micro leakage to earth of this device.

⛔ Using gas and water pipes to ground the appliance is prohibited.

Preliminary warnings for R32

⚠ The R32 refrigerant gas is slightly flammable and odorless.

⚠ All precautions regarding the handling of refrigerant must be followed in accordance with current regulations.

⚠ Avoid proximity to continuously operating ignition sources (open flames, gas appliances, electric stoves, lit cigarettes, etc.).

⛔ Smoking is prohibited near the appliance.

⛔ The use of mobile phones is prohibited near the appliance.

⚠ Perform the following checks:

- Perform safety checks to ensure that the risk of combustion is minimized
- avoid working in confined spaces
- delimit the area around the workspace
- ensure safe working conditions around the area by checking for flammable materials

Power line dimensioning

Use the tables below for the sizing of the power supply line and its protection device.
These are not average draw or transient peaks, but values to be considered for the correct sizing of the plant and the request of the contractual power (excluding loads due to the normal operation of the building).

⚠ Maximum power is reached only in exceptional cases. Therefore, the indicated trip current is suggested to guarantee a balance between machine absorption and incidence in the general system.

⚠ The indicated minimum cable cross-section area must be verified according to the actual conditions of the installation: length of the cable, characteristics of the electrical supply, etc.

⚠ For units equipped with electrical heating elements, the draw values of the units must be added to those of the heating elements shown in the following tables.

Access to the electrical panel

⚠ Access to the electrical panel is only permitted to qualified personnel.

⚠ Before carrying out any work, ensure that the power supply is switched off.

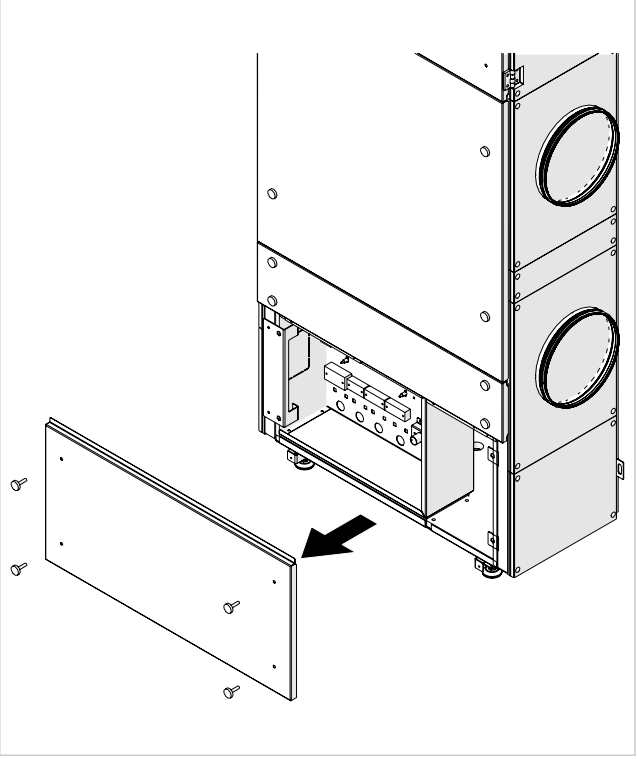

To access the connections:

► remove the adjustable spacer from the lower front panel

► remove the panel

Connections

Before connecting the unit to the mains power supply, make sure that the disconnector is open. The power supply of the single-phase unit must be connected to the appropriate terminals, subjected to the action of the isolating switch.

⚠ Use properly sized cables to avoid voltage drops or overheating.

Connection plate

The unit comes with a plate for electrical connections positioned on the lower back panel.

It is possible to change the configuration of the plate by placing it on the side facing downwards.

1.	Connection plate (configurable)

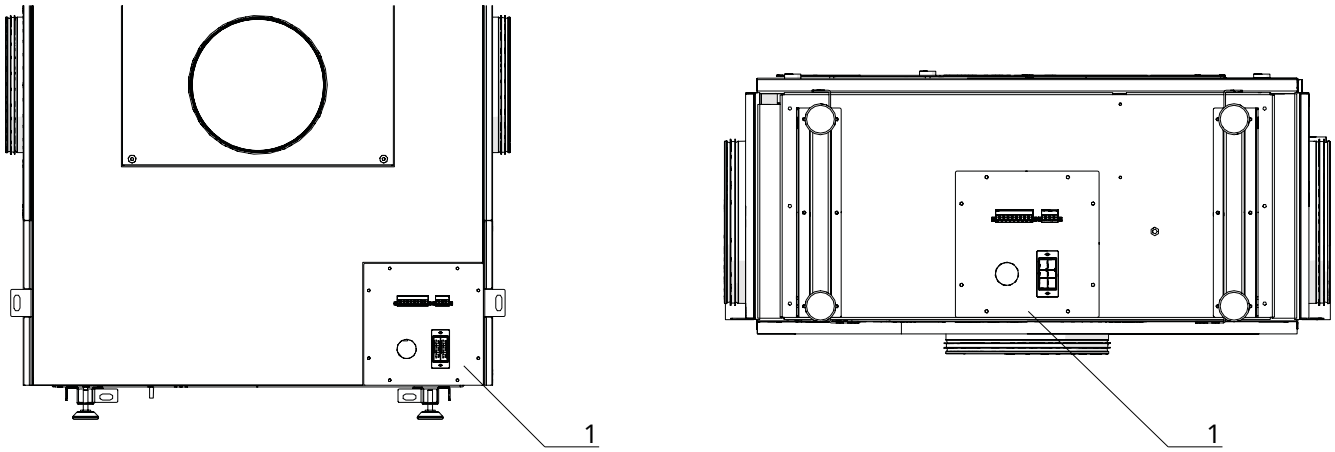

Connection diagram

1.	Unit power supply with LCDI plug	**4.**	Control panel communication cable
2.	Unit power supply with Schuko plug	**5.**	VERTICAL STACK
3.	Remote control		

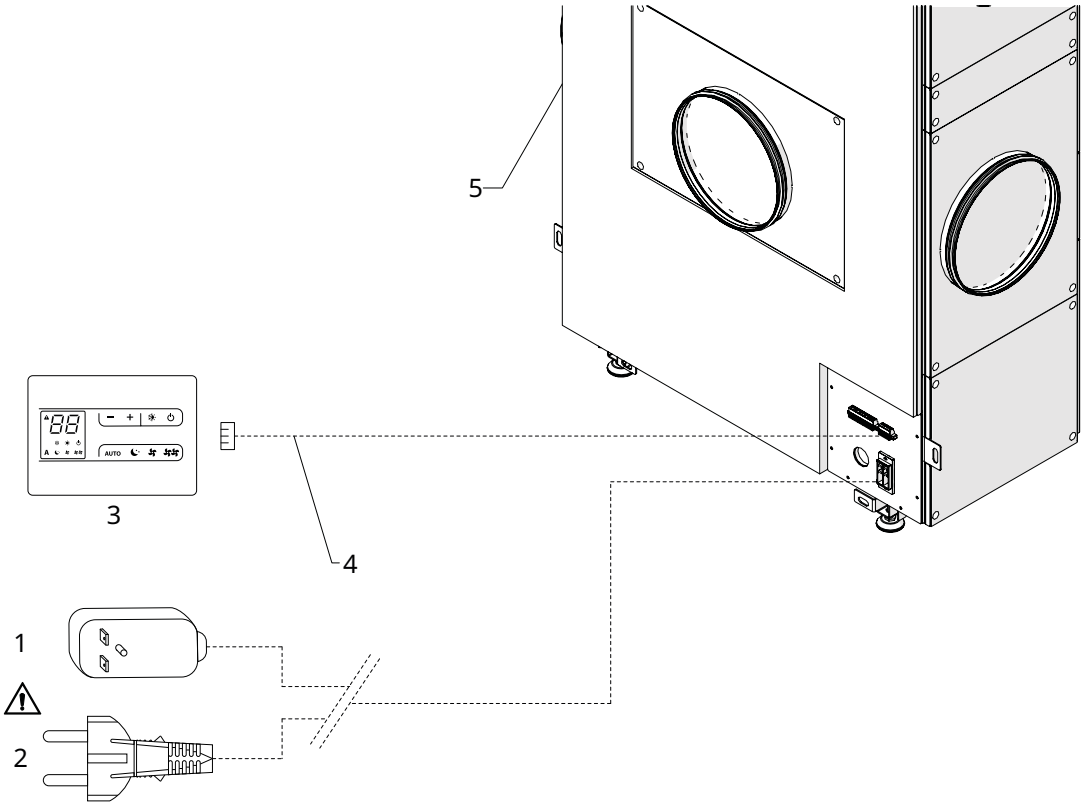

⚠ Depending on the destination country, the unit can be supplied with one of two types of electrical plugs.

On-board electrical panel

Wiring scheme

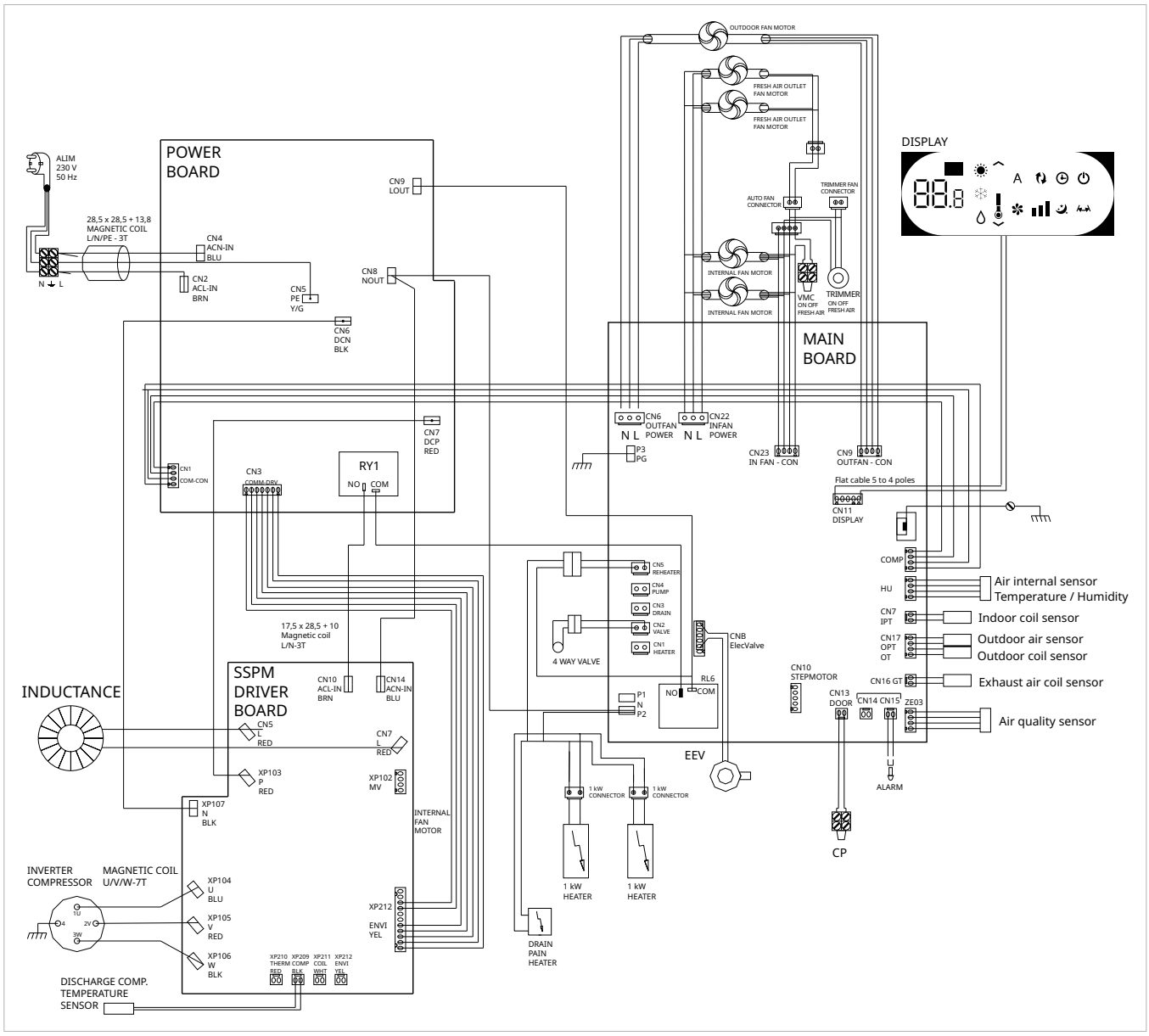

1.	TPG display
2.	Remote control / GWB
3.	Power supply

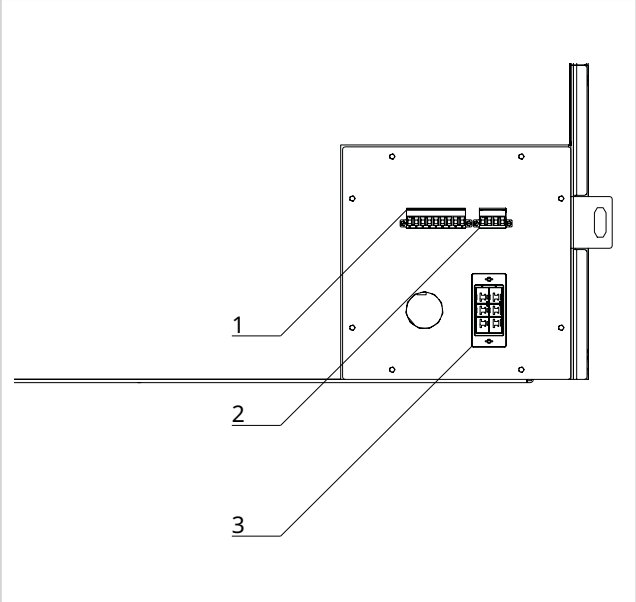

On - Off remote connection

Through this contact it is possible to connect an external device which inhibits the operation of the appliance, such as:

- Remote On - Off (on board)

Operation

When the contact connected to the CP input is closed, all units are switched off.

When a button is pressed on the display, the symbol ⚠ flashes

⛔ It is forbidden to connect the CP input in parallel with other electronic boards. In this case, use separate contacts.

REMOTE CONTROL

4.1 Installation

Description

The control panel is an electronic controller with humidity and air quality sensors inside, with the possibility of control over several devices equipped with the same circuit board. It is equipped with a humidity and air quality sensor.

⚠ The temperature probe can be remote-controlled in one of the connected units.

Mounting

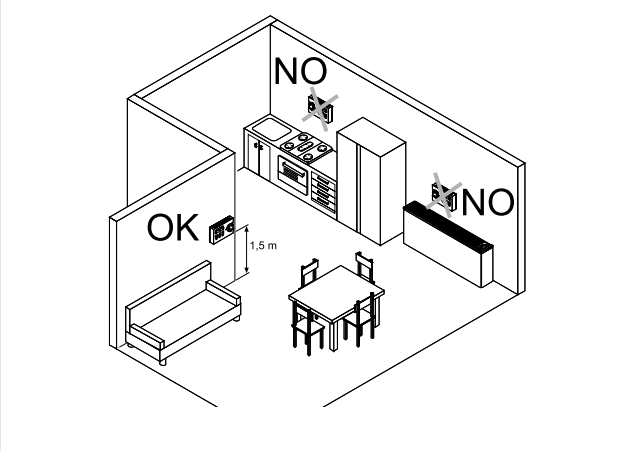

The control panel must be installed:

- on the outside walls
- at a height of approx. 1.5 m above the floor
- away from doors and windows
- away from heat sources such as radiators, fan coils, cookers, direct sunlight

⚠ The control panel is supplied in the package already assembled.

A	Notches

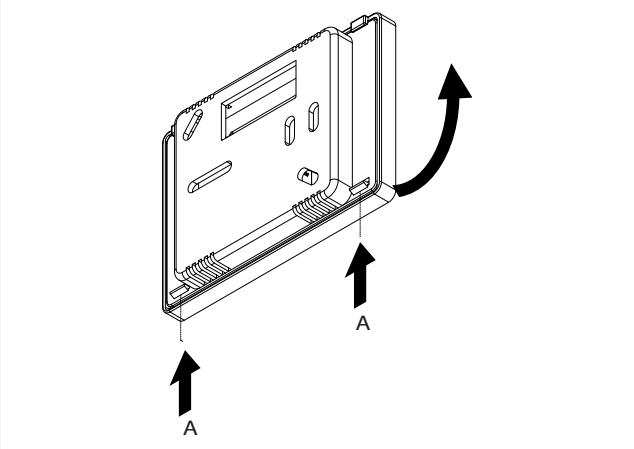

Before mounting on the wall:

► release the fastening notches on the rear side of the control panel

► separate the base from the control panel

► use the base as a template to mark out the fixing points

A	Control base
B	Holes for fixing to the wall
C	Screws
D	Hole for the passage of electrical connections

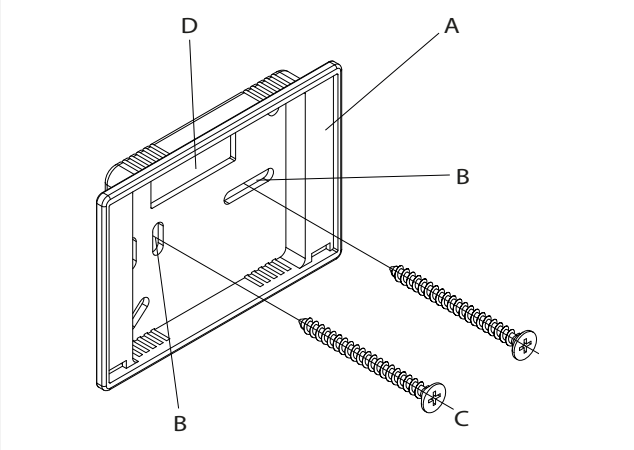

For wall mounting of the control panel:

► drill holes in the wall

► pass the electrical cables through the prepared hole

► fix the base of the control unit to the wall using suitable screws and dowels

► make electrical connections

► close the control panel

⚠ Take care not to crush the wires when closing the control panel.

4.2 Electrical connections

Connection diagram

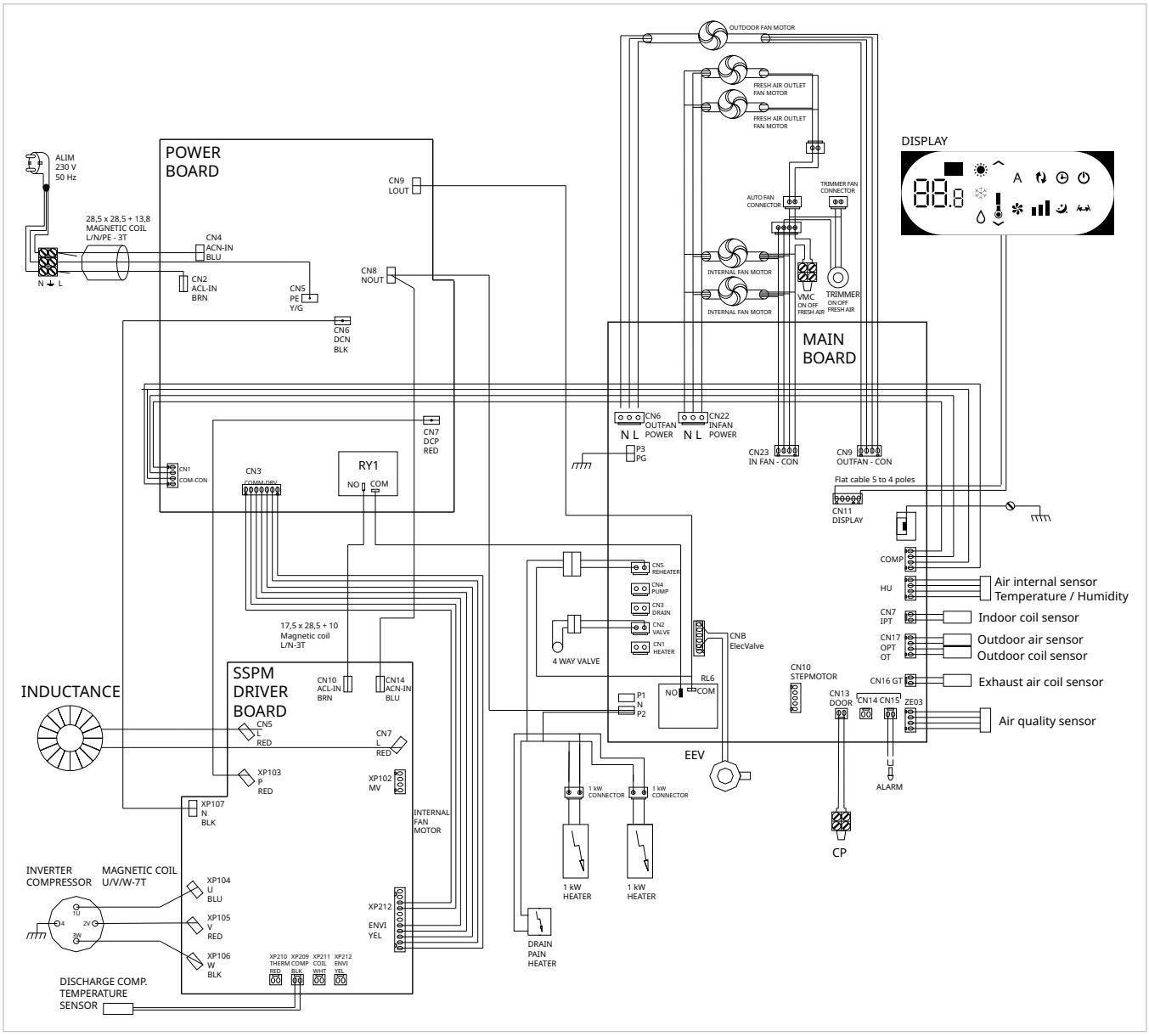

Digital inputs		
CN13	Door	Presence contact for terminals CP
CN14	Drain pump start level	-
CN15	Drain alarm	-
Analog inputs		
ZE	Internal air quality sensor	-
HU	Internal air humidity and temperature probes	-
CN17 OT	External temperature probe	NTC 5.28k Ω a 25~C
CN17 OPT	Condenser probe	NTC 5.28k Ω a 25~C
CN7 IPT	Evaporator probe	NTC 5.28k Ω a 25~C
CN16 GT	Exhaust air probe	NTC 5.28k Ω a 25~C
XP209	Compressor dicharge temperature probe	NTC 58k Ω a 25~C
Digital outputs		
CN2	Valve	Reversing valve summer/winter
CN5	Heater	External heater (230VAC/5A)
CN4	Pump	Drain pump
Analog outputs		
CN23	Infan	Driving signal 0-10V external fan
CN9	Outfan_con	Driving signal 0-10V external fan
CN19	Step motor	Driving step motor for damper
CN10	Step motor	Driving step motor for damper
CN11	Display	Display touch connection

Connection of the control panel

The remote panel is connected to the unit via the supplied cable, which features a white plug-in connector at the back of the display.
To connect the devices:

► Insert the cable into the panel

⚠ The cable is pre-wired on the unit.

Control panel with Wi-Fi board

1.	Wi-Fi board
2.	White plug-in connector

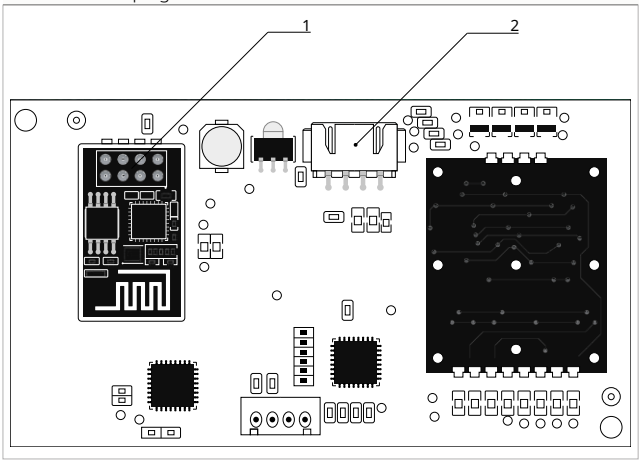

Control panel with Modbus board

A communication card is provided inside the control panel to enable communication with the unit using the Modbus RTU protocol.
To connect the Modbus board

► Connect the Modbus connection to the two output wires

⚠ The connections for Modbus are indicated as A (+) and B (-).

1.	Modbus board
2.	White plug-in connector

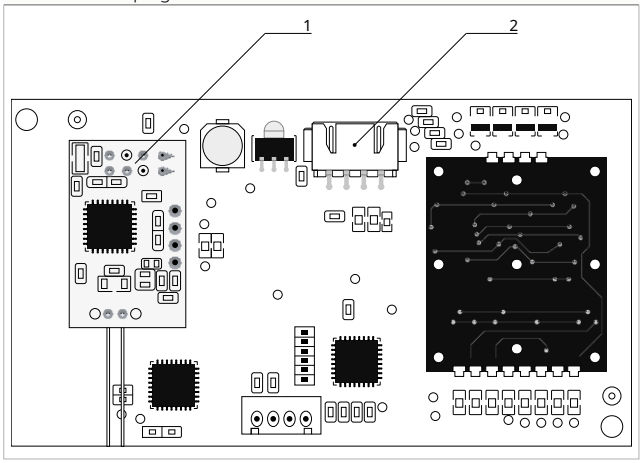

RS485 serial connection

The control panel can be connected via an RS485 line to one or more units directly to the control board on the unit or via the remote displays.
For the connection:

► respect the indications "A" and "B"

► connect appliances in series

⚠ Use a shielded two-core cable suitable for serial RS485 connection with a minimum cross-section of 0.35 mm².

⚠ Keep the two-core cable separate from the power supply cables.

⚠ Route in such a way as to minimise the length of deviations.

⚠ Terminate the line with the 120 Ω resistor supplied.

⛔ "Star" (y) connections are prohibited.

4.3 Interface

Description

The control panel is an electronic controller equipped with internal memory that saves data even in the event of abnormal shutdown or power outage.

⚠ After 20 seconds of inactivity, the brightness of the panel reduces, and only the ambient temperature is displayed on the screen. Pressing any button restores the maximum brightness.

⚠ Refer to the User's Manual for operation on the control panel.

4.3.1 Display

A Display area

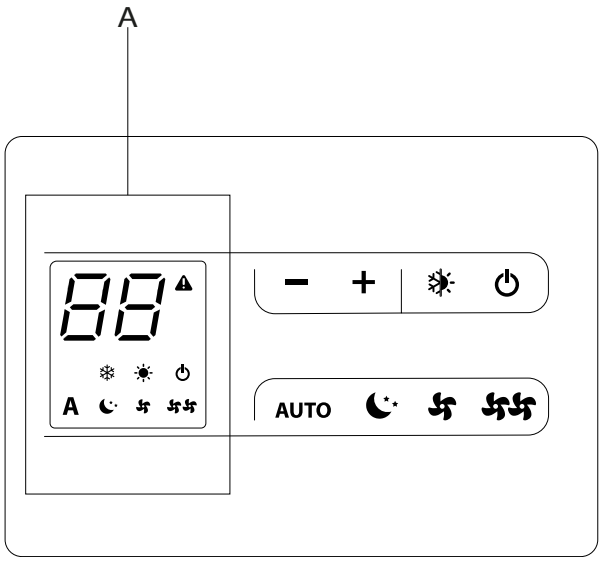

Status and alarms shown on the display.

	Alarm indication Flashing with closed CP contact Lit for alarm indication
	Summer mode active
	Winter mode active
	Unit in stand-by
A	Auto function
	Minimum ventilation speed activated
	Rated ventilation speed activated
	Maximum ventilation speed activated

Keypad key functions

A Keypad area

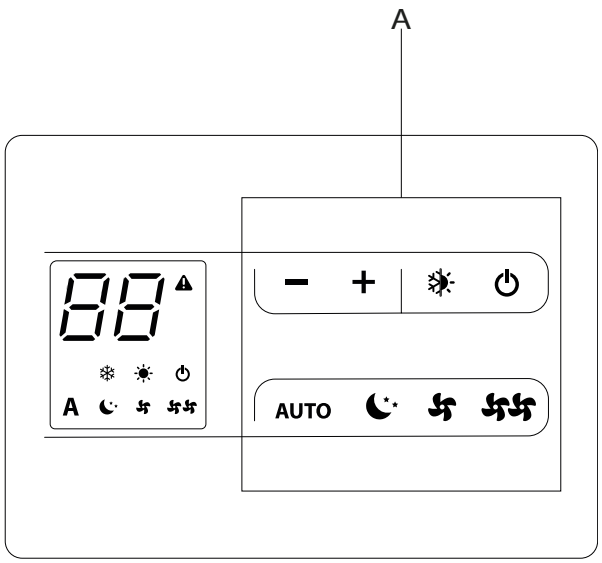

Related keys and functions

—	Decreases the set temperature
+	Increases the set temperature
	Allows you to change the operating mode between summer and winter
	Allows the control panel to be switched on or put into stand-by mode
AUTO	Makes ventilation speed adjustment fully automatic according to IAQ values is RH %
	Allows you to set the minimum ventilation speed
	Allows you to set the rated ventilation speed
	Allows you to set the maximum ventilation speed

General switch-on

Before switching on:

⚠ Make sure that the control panel is connected to the power supply.

⚠ If there is a main switch on the power supply line, switch the system on by pressing the switch.

To activate the device

► press and hold the button ⏻
The symbol ⏻ lights up

4.4 Warnings

Switching off for extended periods

In case of seasonal or long-term shutdown:

► deactivating the device

► set the system's main switch to off

⚠ The anti-freezing function is deactivated.

ON-BOARD DISPLAY

5.1 Interface

Description

The unit is controlled through the built-in Wi-Fi panel and the provided infrared remote control.
The onboard display allows you to:

- view the operating status
- view any alarms
- select the different functions by pressing the various symbols

Display

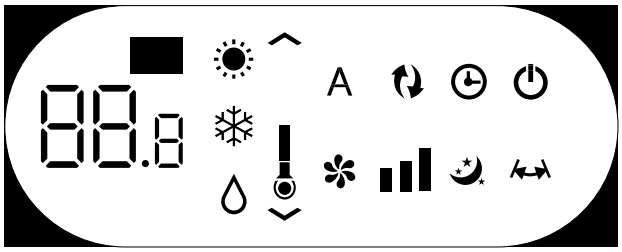

Related keys and functions

88.8	Indicates the set point
^	Increases the set temperature
v	Decreases the set temperature
⏻	Allows you to activate or put the appliance in stand-by
A	Function not used
❄	Allows the function in cooling mode only
💧	Function in dehumidification mode only.
✽	Allows the funztion in ventilation mode only
☀	Allows the function in heating mode only
☾	Nocturnal wellness key
▮▮▮	Allows control of the ventilation speed
🕒	Allows you to set the timer function
🌡	Digital thermometer 1÷7 red bars in winter and blue in summer

General switch-on

To be able to control the appliance using the remote control or the touch display:

► insert the power plug of the appliance into the power outlet of the installation or turn on the main switch provided on the power line

Once the operation is performed, through pressing the symbols on the touch screen display it will be possible to manage the operation of the system.

To activate the device

► press and hold the button ⏻
The display switches on
The set point is shown on the three digits of dispplay
88.8

⚠ The control system of the device has a memory, so all the settings will not be lost in case of power outage or shutdown, except for the ventilation. The button in question is used to activate and deactivate the device for short periods.

⚠ In case of prolonged shutdown of the device, it should be deactivated by switching off the main power switch or unplugging it from the power outlet.

5.2 Main functions

Set the temperature

To set the room temperature

► press the keys ︿ ﹀ to increase or decrease the desired value
The value shown on the display changes

⚠ The temperature adjustment range is from 16 to 31°C, with a resolution of 0.5°C.

⚠ Avoid setting the temperature too low or too high, as it can be detrimental to health and also leads to unnecessary energy waste.

Operation in cooling mode only

To select the cooling operation

► press and hold the button ❄ for approx. 2 seconds
The ❄ symbol on the display indicates that the Cooling function is activated

By using this function, the appliance dehumidifies and cools the environment.
When the setpoint is lower than the room temperature, the fan coil unit starts and begins to deliver cold air, maintaining the ventilation even when the setpoint is reached.

Operation in ventilation mode only

To select the ventilation operation

► press and hold the button ✻ for approx. 2 seconds
The ✻ symbol on the display indicates that the Ventilation function is activated

By using this function, the device only activates the fan and does not have any effect on the temperature or humidity of the ambient air.
It is possible to choose the fan speed.

Set the fan speed

To select the ventilation speed

► hold down the button ▮▯
The ▮▮ symbol varies according to the ventilation speed in the following sequence:
▮▯▯ *Minimum*
▮▮▯ *Medum*
▮▮▮ *Maximum*
▮▮▯ *Automatic (visible by scrolling the 3 speed bars on the display)*

⚠ The higher the fan speed set, the greater the performance of the appliance, but the lower its quietness.

⚠ By setting the automatic fan speed, the onboard microprocessor independently adjusts the speed, keeping it higher as the deviation between the detected room temperature and the set temperature increases. The speed is automatically reduced as the room temperature approaches the set temperature.

⚠ In Dehumidification mode or Night Comfort mode, the control of fan speed is disabled as the unit can only operate at the minimum speed.

Operation in heating mode only

To select the heating operation

► press and hold the button ☼ for approx. 2 seconds
The ☼ symbol on the display indicates that the Heating function is activated

By using this function, the device heats the environment.
With a setpoint higher than the room temperature, the fan coil unit starts and begins to deliver hot air.

⚠ The anti-freeze function is enabled by default. In the event that the ambient temperature drops below 6° C, the unit will automatically activate even in the shutdown mode to prevent freezing.

Nocturnal operation

To select the nocturnal wellness operation

► press and hold the button ☾ for approx. 2 seconds
The ☾ symbol lit on the display indicates that the Nocturnal Wellness function is activated

⚠ The ventilation speed is automatically set to the minimum speed.

⚠ The set temperature varies automatically:

- in heating mode, the set temperature decreases by 1°C after the first hour and by an additional degree in the second hour
- in cooling mode, the set temperature increases by 1°C after the first hour and by an additional degree in the second hour
- In both cases, after the second hour, the temperature setpoint will not be further altered, and after 6 hours, the unit will go into standby mode.

⚠ This function is not available for dehumidification-only and ventilation-only operation.

⚠ This function can be disabled at any time by pressing the button again.

⚠ If the Timer function is set simultaneously, the appliance will turn off when the set time expires.

Set the timer function

To set the timer function

► hold down the button ◷ for 5 seconds
The ◷ symbol on the display indicates that the Timer function is activated

This function allows you to schedule the activation or deactivation of the appliance.

To program the activation of the appliance

- ► with the display off, press the key for 5 seconds
  The symbol on the display indicates that the Timer function is activated
- ► select with the arrows the number of hours (from 1 to 24 h) after which the appliance will be switched on automatically
- ► press the button again to confirm the operation
  The display lights up completely, showing the settings (setpoint, active functions, etc.) that will be activated when the appliance is turned on automatically.
- ► press the button again to confirm the operation

To program the device to turn off.

Set the key lock

To set the key lock

- ► press and hold the button for approx. 10 seconds
  The display lights up entirely, showing the active settings, and the flashes with a frequency of 1 second
  Any action is prevented from the user

To deselect the key lock

- ► press and hold the button again for approx. 10 seconds
  The display lights up entirely, showing the active settings, and the button remains fixed.

To deactivate/put the control unit in standby mode

To deactivate/put the control unit in standby mode

- ► press and hold the button for approx. 2 seconds
  The control panel switches off

⚠ The control system of the appliance is equipped with memory, so all settings will be retained in case of power loss or shutdown (except for ventilation).

⚠ In stand-by mode, the control system ensures anti-freeze protection.

⚠ In case of extended shutdown of the appliance, it should be deactivated by disconnecting the main switch or removing the plug from the power outlet.

5.3 Warnings

Alarm display

⚠ In case of an appliance malfunction, an alarm code is displayed on the screen.

⚠ In case of an alarm, the appliance still maintains some active functions.

E 1 Faulty room temperature sensor (RT)
It is possible to activate Cooling, Dehumidification, and Heating functions regularly

E2 Faulty internal battery sensor (IPT)
It is possible to activate Cooling, Dehumidification, and Heating functions regularly

E5 Faulty indoor fan motor
It is not possible to activate any operation of the device

E7 Lack of communication with the display
It is not possible to activate any operation of the device

cP Open contact for presence detection (CP)
The appliance only activates if the contact is closed, please check the connection of the terminals.

flashing Unsuitable water temperature
In heating mode, the water temperature is lower than 30°C

flashing Unsuitable water temperature
In cooling mode, the water temperature is higher than 20°C

Problem diagnosis

It is important for the user to be able to distinguish between any malfunctions or functional anomalies and the expected behavior of the device during its normal operation.
Most common issues can be easily resolved by the user through simple operations, while for some alarms displayed on the screen, it is necessary to contact the Customer Support Service.

⚠ Any attempt of repair carried out by unauthorized personnel immediately voids any form of warranty.

START-UP

6.1 Preliminary Warnings

⚠ **This section is dedicated to the Technical Service Centre. The specifications of the Technical Service Centre are described in chapter** *p. 5*.

⚠ **Initial commissioning must be carried out by the Technical Service Centre.**

⚠ **For detailed information on accessories, please refer to the relevant instruction sheets.**
See chapter 2.6 *p. 11*

⚠ The customer must be present when the appliance is tested and informed of the contents of the manual and procedures. After commissioning, the manual and the warranty certificate must be handed over to the customer.

⚠ Before start-up, all works (electrical, hydraulic and airflow connections) must have been completed.

6.2 First start-up

Preliminary Checks

Before commissioning, check that:

Operational checks

- all safety conditions have been met
- the unit has been properly secured to the supporting surface or wall
- the minimum technical spaces have been observed

Airflows

- the airflow connections have been made according to the instructions in the manual
- all airflow connections are correctly secured
- the ducting is correctly supported
- the ducting does not have any bottlenecks
- the ducting is thermally insulated

Electrical checks

- the cross-section of the power supply cables is adequate for the absorption of the appliance and the length of the connection made
- grounding is correctly performed
- the electrical connections have been established correctly
- all control wires are connected and that all electrical connections are secure

Compressor safety block

1. Compressor lock screw

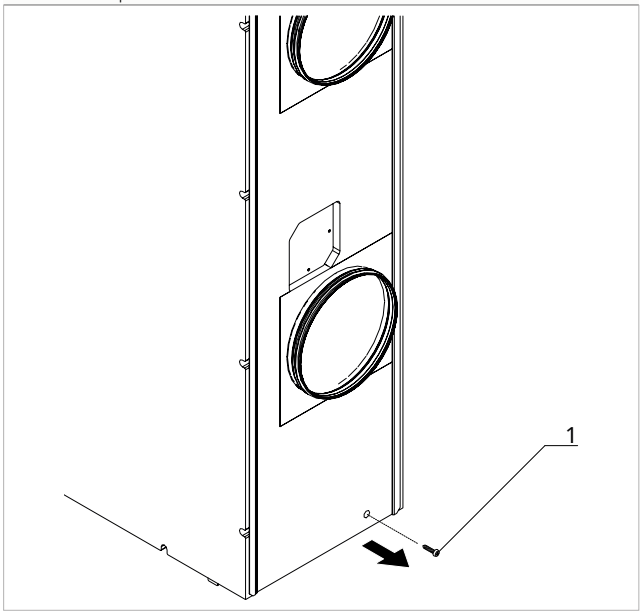

⚠ Before starting the unit, make sure you have removed the compressor safety lock screw. Failure to remove it could damage the refrigeration circuit and jeopardize the proper functioning of the unit.

Start-up

After all checks have been carried out, the unit can be put into operation.

To activate the appliance:

► please refer to the user manual

Checks with the machine switched on

After starting up, check that

Operational checks:

- verify the different modes of operation
- verify that the appliance stops and then restarts
- switch the appliance off and on again and check that it restarts correctly
- the appliance operates within the recommended operating conditions (see technical specifications table)
- check that the air flow rates are correct

Hydraulic Checks

- check for proper condensate drainage

Electrical Checks

- the current absorbed is less than the maximum indicated in the technical data table
- the supply voltage value is within the set limits and does not fall below the nominal value -10 % during operation

Independent control of the VMC side

This board is used to disconnect the VMC-side fans from parallel operation and manage them independently through the potentiometer.

1. Potentiometer

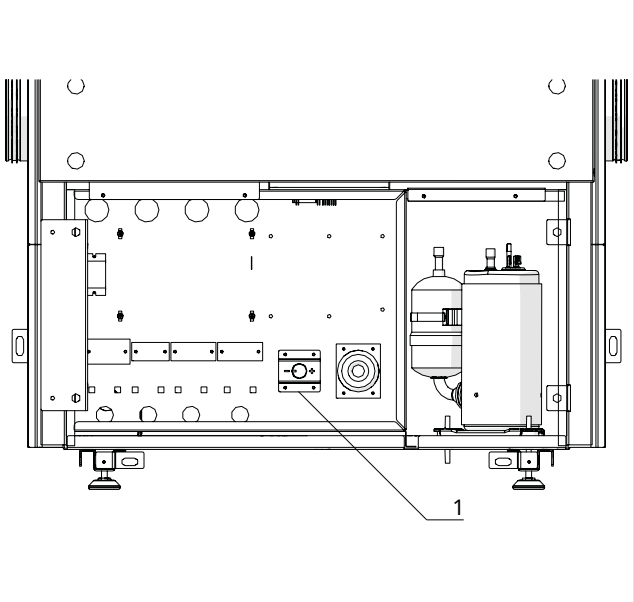

⚠ This additional board is pre-wired and installed in the electrical panel.

To activate it:

1. A connector
2. T connector

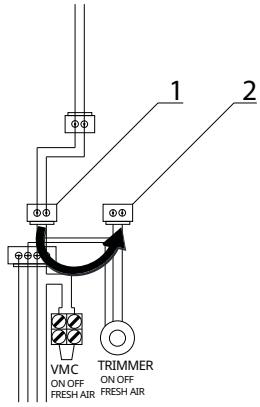

► disconnect the A connector

► connect the A connector with the T connector

Plant delivery

Once all the checks and controls on the correct operation of the plant have been completed, the installer must explain the following to the user:

- the basic functional characteristics of the appliance
- the instructions for use
- the routine maintenance

Switching off for extended periods

If the appliance is not used for a long period of time, the following steps must be taken:

► deactivating the device

► disconnect the power supply

⚠ To restart the appliance after it has been out of use for a long period, call in the Technical Service Centre.

MAINTENANCE

Routine maintenance

Annual operations

The once-a-year maintenance plan includes the following operations and checks and must be carried out by the Technical Service Centre or by qualified personnel.

Electrical circuit
Check:

- electrical supply voltage
- the electrical absorption
- connections tightening
- that there is no damage or excessive wear to electrical cables
- that the gaskets and sealing materials have not deteriorated to such an extent that they are no longer suitable for the purpose of preventing the development of flammable atmospheres inside
- the correct fixing of cable glands
- safety devices

Mechanical checks
Check:

- tightening of the screws, fans and electrical box, of the unit's external panelling
- the state of the structure

⚠ Bad fixings result in abnormal noise and vibration.

⚠ If oxidised parts are present, treat them with suitable paints to eliminate or reduce oxidation.

Hydraulic controls
Check:

- the regular drainage of condensate
- cleaning the condensate collection trays
- cleaning the exhaust ducts

Airflow controls
Check:

- the regular flow of air
- cleaning of any intake grids
- cleaning the ducting

Cleaning

- cleaning of aesthetic cover
- cleaning or filter replacement
- cleaning the heat exchanger
- cleaning the condensate collection trays

Cleaning or filter replacement

VMC filters

1.	Filter access hatch
2.	Filter

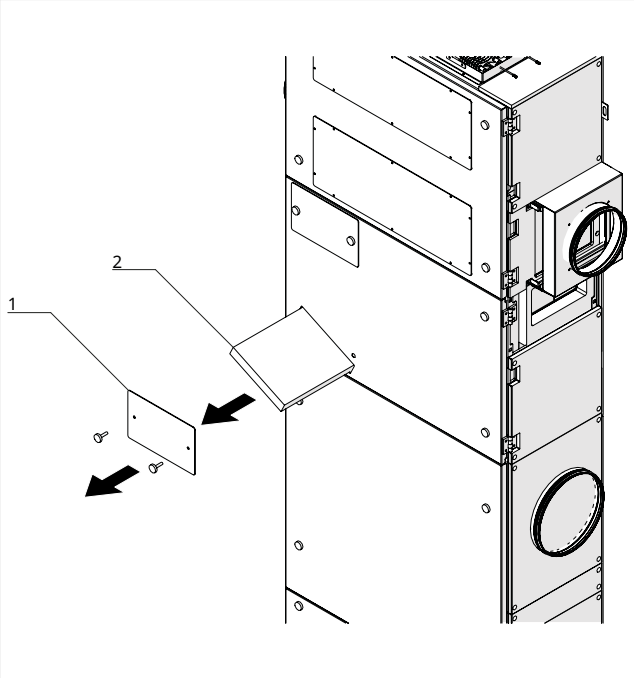

To remove:

► disconnect the power supply to the unit

► remove the knobs from the access door to the filter

► remove the filter access hatch

► take out the filter

⚠ Pay attention to sharp surfaces

ⓘ **If the condition of the filters is acceptable, they can be cleaned using a vacuum cleaner or a low-pressure compressor.**

ⓘ **If it is impossible to clean them, the filters must be replaced.**

To reposition:

► proceed in reverse order

Cleaning the heat exchanger

To clean the heat exchanger:

1.	Front panel
2.	Heat exchanger

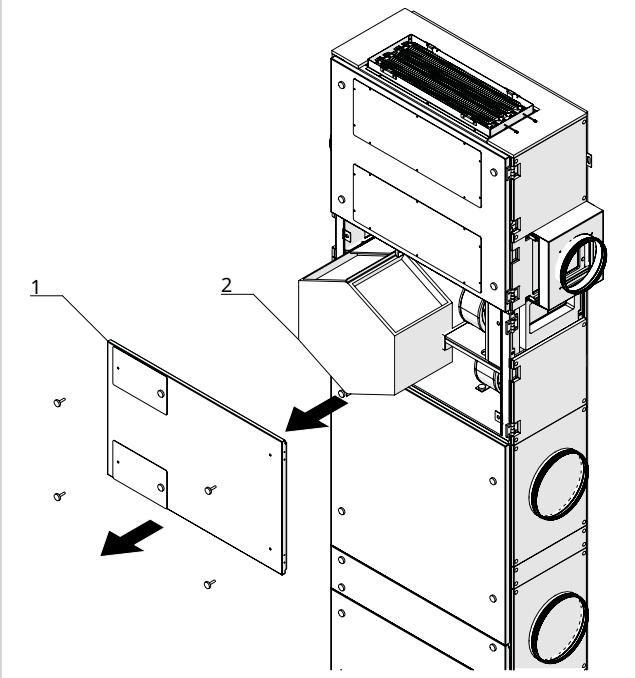

► disconnect the power supply to the unit

► remove the knobs from the front panel of the unit

► remove the front panel from the unit

► take out the heat exchanger

► gently proceed with cleaning using a vacuum cleaner or a low-pressure compressor

⚠ Never touch the fins of the heat exchanger, handle only the closed sides.

ⓘ **There is a special clamp/green strap for removing the heat exchanger.**

ⓘ **To prevent dirt from entering the heat exchanger, clean in the opposite direction to the air flow.**

To reposition:

► proceed in reverse order

Cleaning the condensate collection trays

To clean the condensate collection trays:

► disconnect the power supply to the unit

1.	Upper front panel
2.	Central front panel

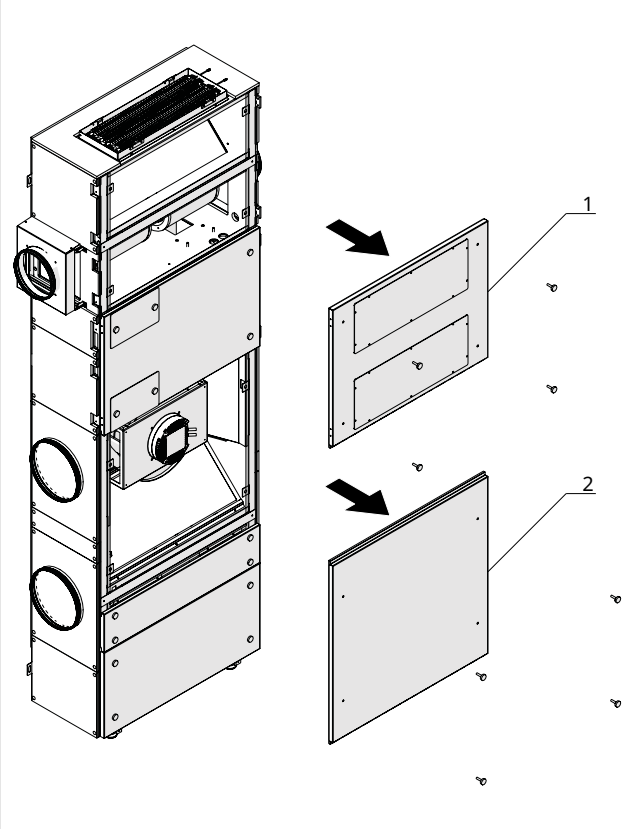

► remove the knobs from the upper and central front panel

► remove the upper and central front panel

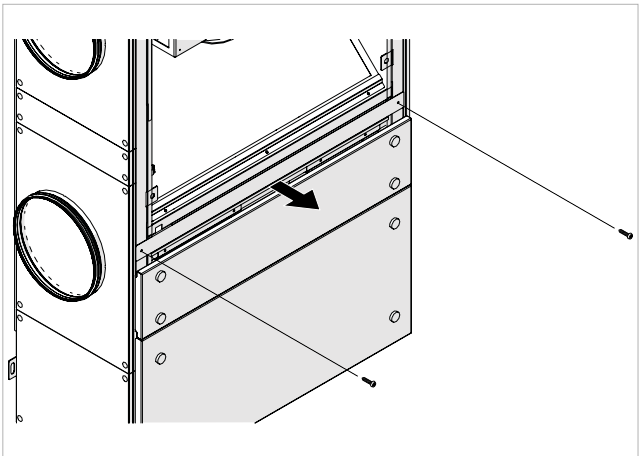

► remove the screws from the trays

1.	Condensate collection tray

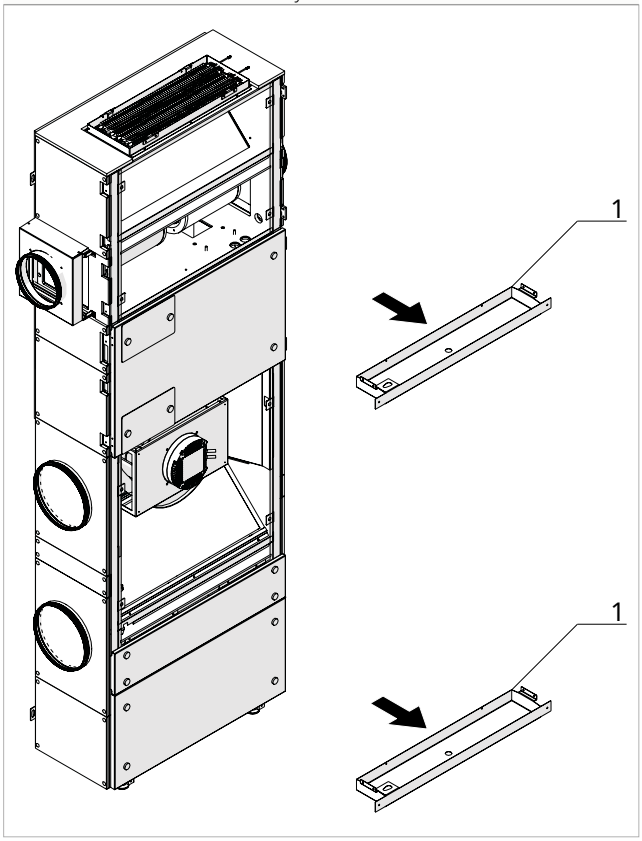

► remove the drainage collection trays

► proceed with cleaning using warm water and mild detergents

► dry the trays with a soft cloth or a clean towel

⚠ Make sure to use non-aggressive detergents to prevent damage to the surfaces.

⚠ Avoid using aggressive chemical products, abrasive brushes, or sharp objects that could damage the surfaces of the trays.

To reposition:

► proceed in reverse order

Extraordinary maintenance

Cleaning of the fans

Supply fans

To clean the supply fans:

► disconnect the power supply to the unit

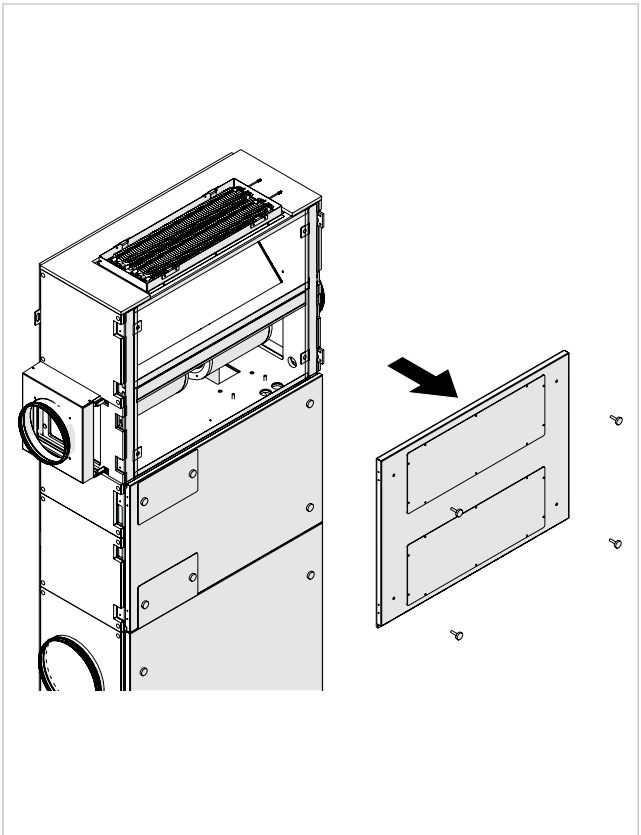

► remove the knobs from the upper front panel of the unit

► remove the upper front panel from the unit

1.	Screws

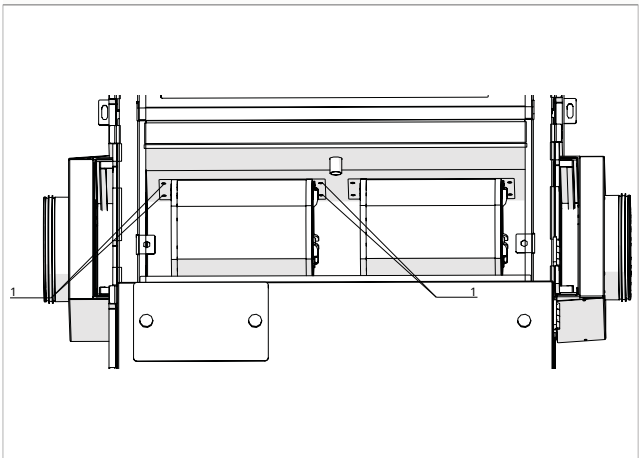

► remove the screws from the fan

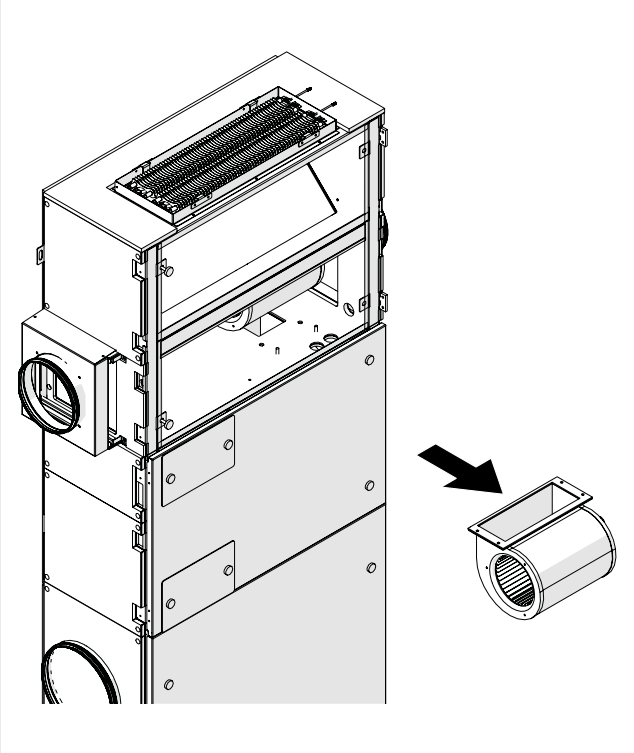

► remove the fan from the unit

► gently proceed with cleaning using a vacuum cleaner or a low-pressure compressor

To reposition:

► proceed in reverse order

VMC fans

To clean the VMC fans:

► disconnect the power supply to the unit

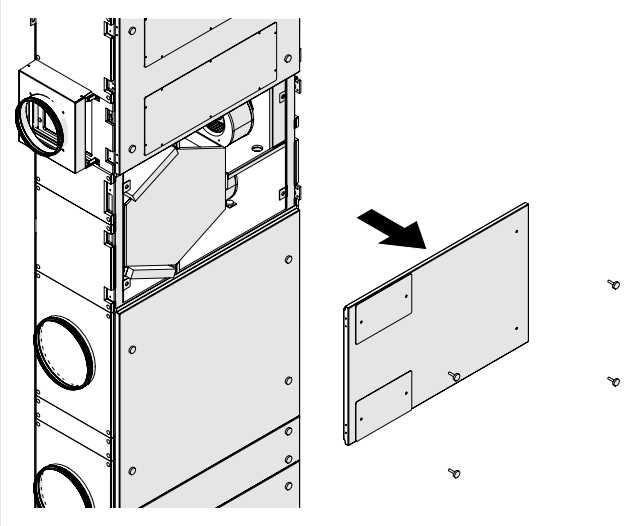

► remove the knobs from the front panel of the unit

► remove the front panel from the unit

1.	Fan
2.	Adjustable spacers

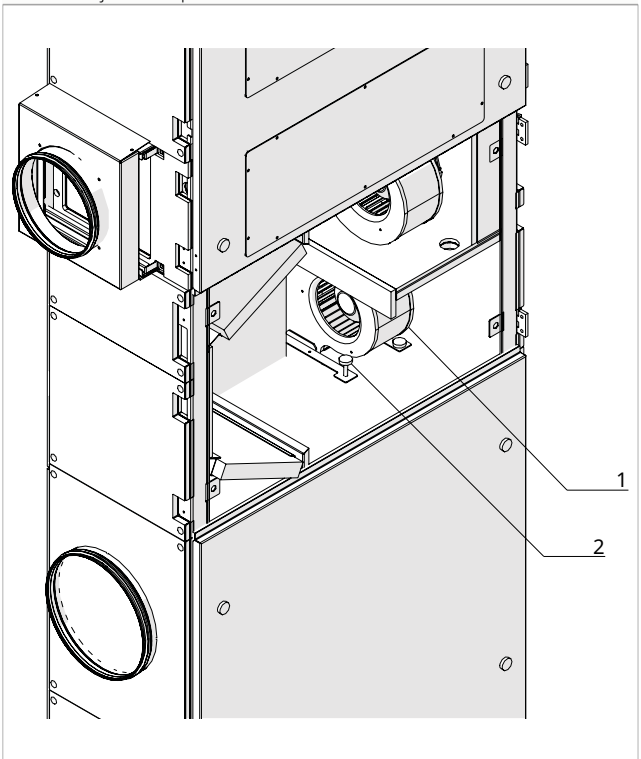

► Remove the knobs from the fixing brackets

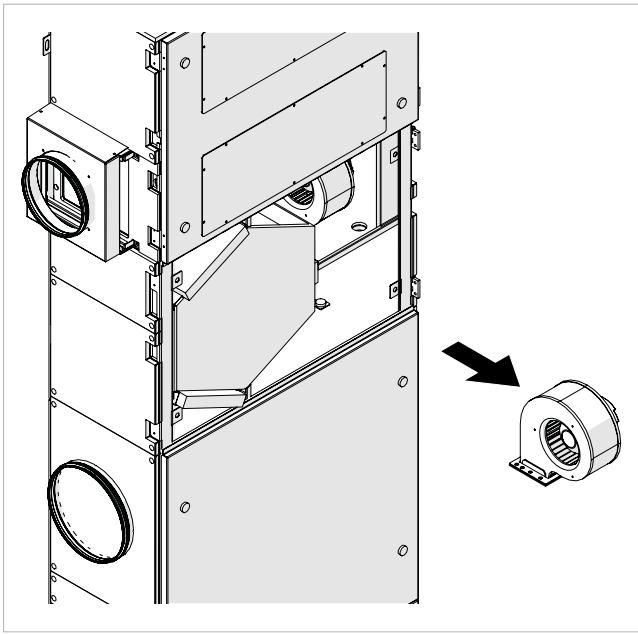

► remove the fan from the unit

► gently proceed with cleaning using a vacuum cleaner or a low-pressure compressor

To reposition:

► proceed in reverse order

General expulsion fan

To clean the general expulsion fan:

► disconnect the power supply to the unit

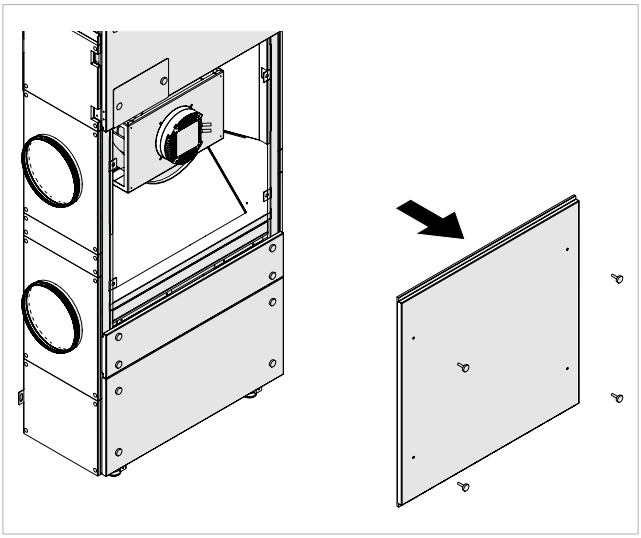

► remove the knobs from the front panel of the unit

► remove the front panel from the unit

1. Screws

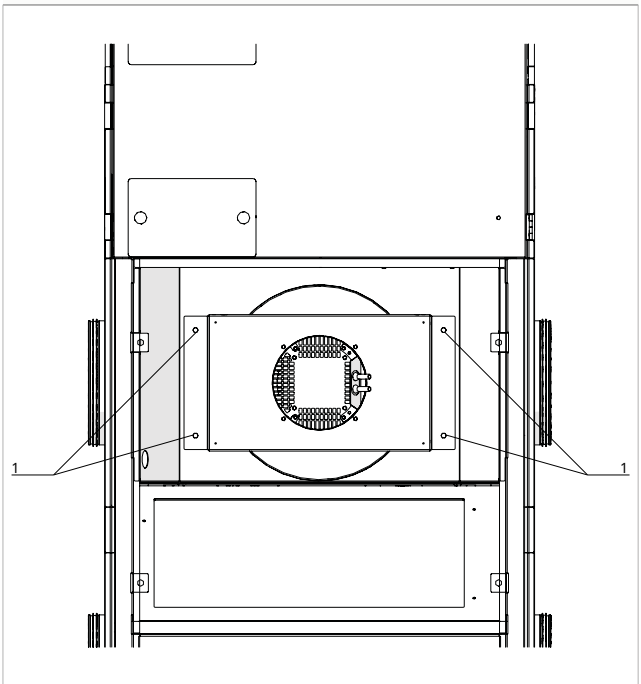

► remove the screws from the flange

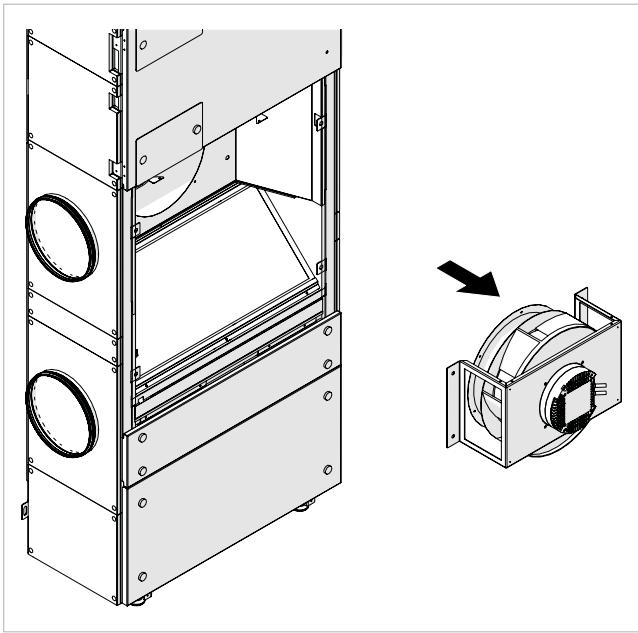

► remove the flange with the fan from the unit

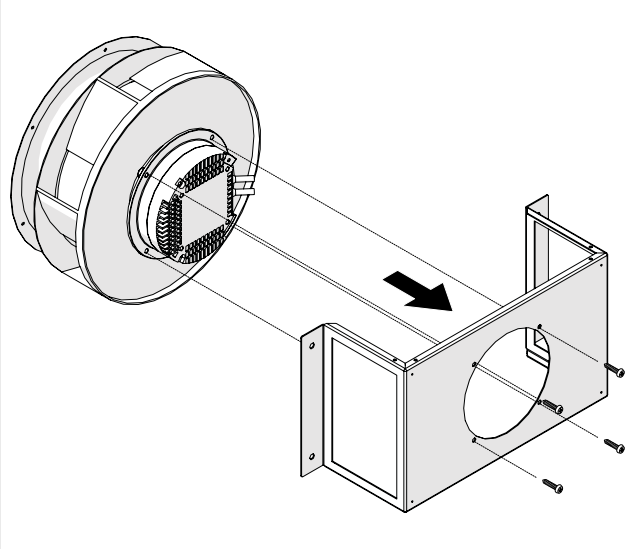

► separate flange and fan

► remove the screws from the flange

► gently proceed with cleaning using a vacuum cleaner or a low-pressure compressor

To reposition:

► proceed in reverse order

FAULTS AND REMEDIES

Preliminary Warnings

If one of the following faults is found:

- ventilation does not activate
- the appliance makes excessive noise
- there is dew formation on the front panel

Follow the instructions below:

► immediately disconnect the power supply

► contact an authorised Technical Assistance Centre or professionally qualified personnel

⚠ Work must be carried out by a qualified installer or a specialised service centre.

⛔ Personal intervention is prohibited.

Troubleshooting Table

DESCRIPTION OF FAULT	CAUSE	REMEDY
Display off	No power supply (light switch off)	Check the electrical connection to the power supply
		Check and, if necessary, replace the fuse located on the power connector (black) on the side of the unit" (Traduzione letterale)
Low or absent air flow, the rooms remain humid	Clogged filters	Replace filters
	Clogged heat exchanger	Clean the heat exchanger
	Frozen heat exchanger	Move the heat exchanger to a warm place and wait for it to defrost. Do not heat it directly with heat sources
	Dirty fan	Clean the fan
	Clogged fan ducts	Clean the ventilation ducts
	Outdoor temperature below 0°C	The unit may be in anti-freeze mode. Wait until the outside temperature increases or consider installing a pre-heating electric heater
High noise level	Noise coming from the unit	Check for the presence of gaps and/or air leaks from the unit's panels Check the siphon connection
		Check if the motors are running correctly (bearings)
	Noise coming from the ducts	Check for the presence of cracks on the intake/exhaust ducts
High vibrations	Vibrating panels	Check the integrity of the panels and aluminum profiles of the unit
		Check the proper closure of the unit's cover and the panel covering the electronic board
		Check that there are no walls that could transmit vibrations to the wall/floor/ceiling
	Imbalanced fan blades	Check the integrity of the fan blades
		Clean the fans
		Check that the small metal clips for balancing the fan blades are still present on the fans
Condensate leak	Clogged condensate drain	Clean condensate drain
	The condensation does not flow from the drainage pipe into the collection tray	Check that the unit is perfectly level
		Check that the condensate drain connections are not clogged
The appliance does not turn on	No power supply	Check if there is power supply voltage
		Check if the dedicated circuit breaker for the appliance has tripped (if so, reset it). If the issue persists, immediately contact the Service Assistance and avoid attempting to operate the appliance
The appliance does not cool/heat sufficiently	The set temperature is too high or too low	Check and adjust the temperature setting if necessary
	The air filter is clogged	Check the air filter and clean it if necessary
	Check for any obstructions to the airflow inside or outside	Remove anything that could obstruct the airflow

Table of alarms indicated by the display

ALARM	CAUSE	OPERATION
E 1	Faulty room temperature sensor (RT)	It is possible to activate Cooling, Dehumidification, and Heating functions regularly. The control only monitors the internal battery anti-freezing
E2	Faulty internal battery sensor (IPT)	It is possible to activate Cooling, Dehumidification, and Heating functions regularly
E3	Faulty outdoor air temperature sensor (OT)	It is possible to activate Cooling, Dehumidification, and Heating functions regularly
E4	Faulty external battery sensor (OPT)	It is possible to activate Cooling, Dehumidification, and Heating functions regularly. The control performs defrost cycles at fixed intervals
E5	Faulty indoor fan motor	It is not possible to activate any operation of the device
E6	Faulty outdoor fan motor	It is not possible to activate any operation of the device
E7	Lack of communication with the display	It is not possible to activate any operation of the device
E8	Faulty compressor discharge sensor	It is not possible to activate any operation of the device
cP	Open contact for presence detection (CP)	The device only activates if the contact is closed. Please check the connection of the terminals

TECHNICAL INFORMATION

Dimensions

A	Power supply	**F**	Installation bracket
B	Condensate drain	**G**	Supply air (optional)
C	Female air duct connection Ø 125 (optional)	**H**	Electrical panel
D	Female air duct connection Ø 160 (optional)	**I**	Display
E	Female air duct connection Ø 200 (optional)		

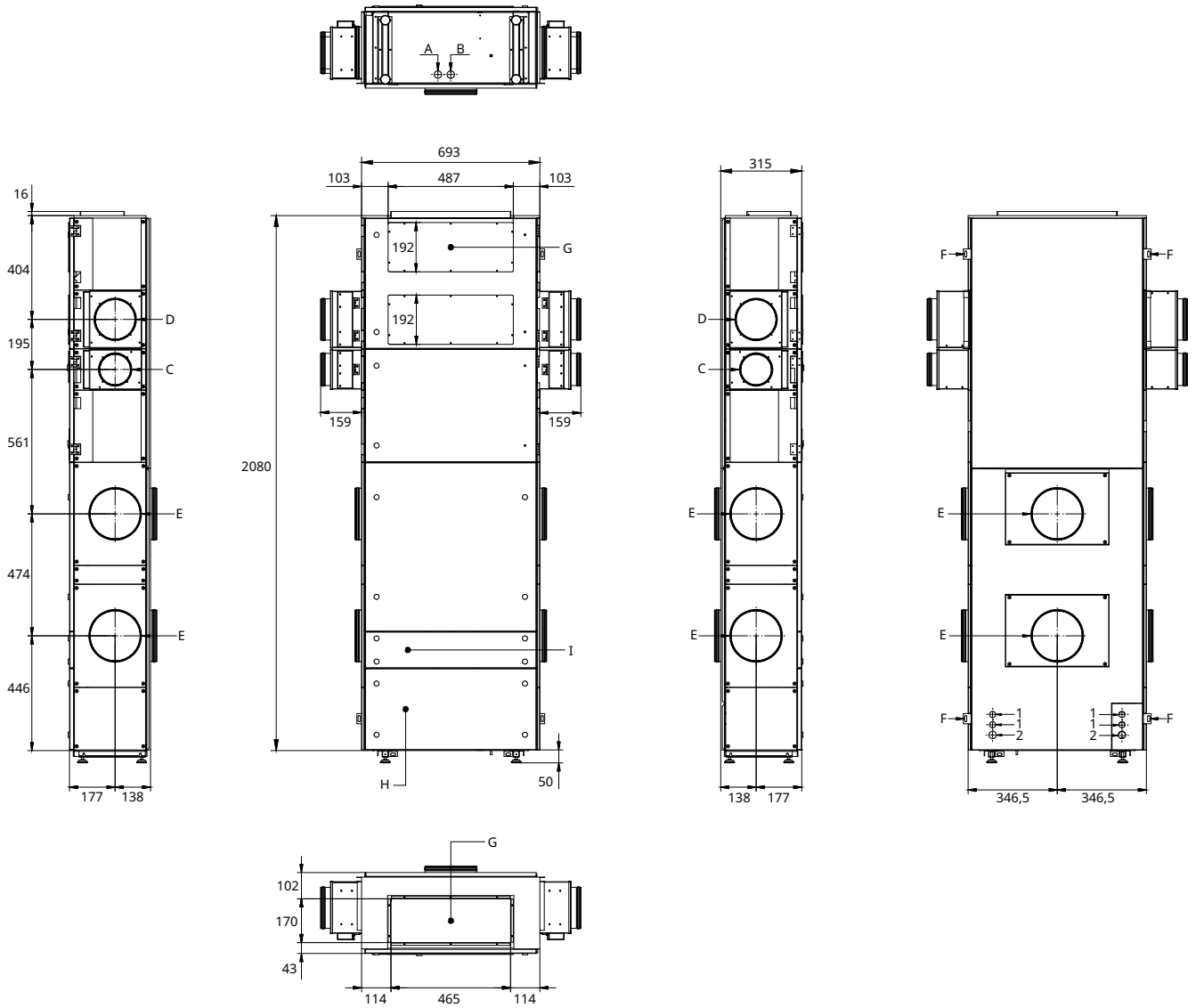

INNOVA S.r.l.
Via I Maggio 8 - 38089 (TN) - ITALY
tel. +39.0465.670104 – fax +39.0465.674965
info@innovaenergie.com

realized by Innova technical dept.